Document No. IM-451 Rev NC-4.1e
dated November 30, 2008

INSTALLATION AND OPERATION MANUAL

FOR

MODEL AK-451-( ) Series

406 MHz ELT Emergency Locator Transmitter with GPS/NAV position

AMERI - KING CORPORATION

17881 Sampson Lane
Huntington Beach, CA 92648
Tel: (714) 842-8555
Fax: (714) 842-4235
Email: ameriking9@aol.com
www.ameri-king.com

REVISION TABLE

REVISION	DESCRIPTION	CHANGED BY	APPROVED BY	DATE
NC	First Release	T.N.	K. V.	4/4/07
NC-1	Add PLB Programming	T.N.	K.V.	9/5/07
	Para. 1.2.1 d) and Product Pictures added			
	Para. 1.2.4.1, 1.2.4.2, 1.2.4.3, and 1.2.4.4 revised			
NC-2	Para. 2.4.5 deleted	T.N.	K.V.	9/10/07
	Add Volume 2 for AK-451-PLB for clarity			
NC-3	Para 1.2.1 c. and 3.1.c revised	T.N.	K.V.	9/11/07
	Para 3.3.5 added			
	Volume 2, Para 4.1 &4.3.2 revised			
NC-4	Para 1.2.1 b and 2.2.3 revised	T.N.	K.V.	9/26/07
NC-4.1	Para 1.2.2, 2.2, 2.4.6, FAA form 337, 2.5.1, revised TSO-C142 information, RTCA DO-160E form for TSO C-227 deleted	QP	KV	6/16/08

NC-4.1a	Revise: Para 2.5.1 & 3.5 to meet Canadian compliances	QP	KV	10/22/08
NC-4.1b	EASA Review updated	QP	KV	10/31/08
NC-4.1c	EASA, T.C. approved updated	QP	KV	11/26/08
NC-4.1d	Brazil Anatel Approval updated	T.N.	KV	11/30/08
NC-4.1e	Wiring diagrams added Approval Certificates added	T.N.	KV	4/10/10

AK-451 ELT Sets *** with no GPS / NAV Position:

Ameri-King P/N	Description	Antennas Included
AK-451-(AF)(AP)/ Whi/Por (AK-451-2)	ELT Set **for General Aviation,** U.S.A. Registration	Whip Antenna P/N 451017-1B and Portable Antenna P/N 451017-4S
AK-451-(AF)(AP) /Whi/ Por/ Canada (AK-451-20)	ELT Set **for General Aviation,** Canadian Registration	
AK-451-(AF)(AP) /Whi/Por/WW (AK-451-21-Country)	ELT Set **for General Aviation.** Worldwide, Europe/ Australia/ Asia/Africa Registration.	
AK-451-(AF)(AP) /Rod3/Por (AK-451-3)	ELT Set **for Business Jet Aircraft**	Rod3 Antenna P/N 451017-2A-1 and Portable Antenna P/N 451017-4S
AK-451-(AF)(AP) /Rod4/Por (AK-451-4)	ELT Set **for Business Jet Aircraft**	Rod4 Antenna P/N 451017-2A and Portable Antenna P/N 451017-4S
AK-451-(AF)(AP) /Bla/Por (AK-451-5)	ELT Set **for Transport Aircraft**	Blade Antenna P/N 451017-3A and Portable Antenna P/N 451017-4S
AK-451-(AP) (AK-451-10)	ELT Set Auto Portable, with portable soft case ONLY (no other accessories included)	Portable Antenna P/N 451017-4S permanently attached to the unit
AK-451-(S) (AK-451-11)	ELT Survival, with portable soft case ONLY (no other accessories included)	
AK-451-(AF)(AP) /Heli/Whi/Por (AK-451-15)	ELT Set **for Helicopter**	Whip Antenna** P/N 451017-1B and Portable Antenna P/N 451017-4S
AK-451-(AF)(AP) /Heli/Rod3/Por (AK-451-14)	ELT Set **for Helicopter**	Rod3 Antenna P/N 451017-2A-1 and Portable Antenna P/N 451017-4S
AK-451-(AF)(AP)/Heli /w 450000-1/Whi/Por (AK-451-12)	ELT Set **for Helicopter**, w Optional Multi Axes (6 Axes) G switch	Whip Antenna** P/N 451017-1B and Portable Antenna P/N 451017-4S
AK-451-(AF)(AP) /Heli/w 450000-1/Rod3/Por (AK-451-16)	ELT Set **for Helicopter**, w Optional Multi Axes (6 Axes) G switch	Rod3 Antenna P/N 451017-2A-1 and Portable Antenna P/N 451017-4S

AK-451 ELT Sets *** with GPS / NAV Position:

Ameri-King P/N	Description	Antennas Included
AK-451-(AF)(AP) w/ GPS/Whi/Por (AK-451-23)(AK-451-6)	ELT Set, with GPS/NAV Position, **for General Aviation**	Whip Antenna P/N 451017-1B and Portable Antenna P/N 451017-4S
AK-451-(AF)(AP) w/ GPS/Rod3/Por (AK-451-7)	ELT Set, with GPS/NAV Position, **for Business Jet Aircraft**	Rod3 Antenna P/N 451017-2A-1 and Portable Antenna P/N 451017-4S
AK-451-(AF)(AP) w/ GPS/Rod4/Por (AK-451-8)	ELT Set, with GPS/NAV Position, **for Business Jet Aircraft**	Rod4 Antenna P/N 451017-2A and Portable Antenna P/N 451017-4S
AK-451-(AF)(AP) w/ GPS/Blade/Por (AK-451-9)	ELT Set, with GPS/NAV Position, **for Transport Aircraft**	Blade Antenna P/N 451017-3A and Portable Antenna P/N 451017-4S
AK-451-(AF)(AP) w/ GPS/Heli/Whip/Por (AK-451-24)(AK-451-17)	ELT Set, **for Helicopter**, with GPS/NAV Position.	Whip Antenna** P/N 451017-1B and Portable Antenna P/N 451017-4S
AK-451-(AF)(AP)w/ GPS / Heli / Rod3 / Por (AK-451-18)	ELT Set, **for Helicopter**, with GPS/NAV Position.	Rod3 Antenna P/N 451017-2A-1 and Portable Antenna P/N 451017-4S
AK-451-(AF)(AP) w/ GPS / Heli / 450000-1 / Whi / Por (AK-451-25)(AK-451-19)	ELT Set **for Helicopter** w GPS & Optional Multi Axes (6 Axes) G switch	Whip Antenna** P/N 451017-1B and Portable Antenna P/N 451017-4S
AK-451-(AF)(AP) w/ GPS / Heli / 450000-1 / Rod3 / Por (AK-451-13)	ELT Set **for Helicopter**, w GPS & Optional Multi Axes (6 Axes) G switch	Rod3 Antenna P/N 451017-2A-1 and Portable Antenna P/N 451017-4S

*** Whip antenna must have separate approval for installation in a Helicopter (see para. 2.2.2)*

**** Each Ameri-King ELT Set comes with dual Antennas, a FREE Soft Case (P/N SC-451) and a FREE Accessory Set including Remote Switch Unit, Pre-Fabricated 25' Wiring Harness Assembly, Audio Buzzer, T-Splitter, and 6' Coaxial Cable Assembly.*

APPLICABILITY

Model/Part No.:	Fixed Whip Antenna 451017-1B 406/121.5 MHz	Or Fixed Rod Antenna 451017-2A 406/121.5/243 MHz	Or Fixed Blade Antenna 451017-3A 406/121.5/243 MHz	Portable Whip Antenna 451017-4S 406/121.5/243 MHz
AK- 451-(AF)	**S**	**S**	**S**	**-**
AK-451(AF)(AP)	**S**	**S**	**S**	**M**
AK - 451-(AP)	**-**	**-**	**-**	**M**
AK - 451-(S)	**-**	**-**	**-**	**M**

M: Mandatory. The respective model must be accompanied by this antenna.
S: Selective. The respective model must be accompanied by at least 1 of these antennas.
- : Not applicable

4500010-1: Battery Package, Lithium, LiMnO2, 90 Hrs Lasting.

TS-451: Computer Test Set and ELT Coding Equipment for AK-451

TABLE OF CONTENTS

Revision Page 2
Table of Contents....7
List of Figures....12

SECTION I
GENERAL INFORMATION

1.1 Scope 14

1.2 Overview 14
1.2.1 Description 14
1.2.2 Application and Equipment Limitation 17
1.2.3 Certification 18
1.2.4 Programming....18
1.2.4.1 User Location Protocols (Long Message)....18
1.2.4.2 Standard Location Protocols (Long Message) 19
1.2.4.3 National Location Protocols (Long Message)....19
1.2.4.4 User (non-location) Protocols (Short Message) 19

1.3 Technical Characteristics 19

1.4 Accessories supplied 24

1.4.1 Installation kit 24

1.5 License requirement 24

SECTION II
INSTALLATION AND TEST

2.1 Unpacking and inspecting equipment 25

2.2 Mechanical installation....25
2.2.1 ELT main unit location and installation 26
2.2.1.1 ELT Location Determination....26
2.2.1.2 Mounting tray and Velcro Holder installation....29
2.2.2 Antenna location and installation 33
2.2.2.1 Antenna location determination....33
2.2.2.2 Antenna installation....35
2.2.2.2.1 Whip Antenna Installation 35
2.2.2.2.2 Rod Antenna Installation 40
2.2.2.2.3 Blade Antenna Installation....43
2.2.2.2.4 Integral Antenna Installation 46

2.2.3 ELT remote unit location and installation 48
2.2.4 Wiring interconnecting harness 51
2.2.5 Audible Monitor Location and Installation 54
2.2.6 Wiring cable Installation.... 55

2.3 Electrical installation 55

2.4 Post installation test.... 55

2.5 Battery installation and replacement 68
2.5.1 ELT main unit battery installation & replacement 68
2.5.2 ELT remote unit battery installation & replacement 71
2.6 FAA Form 337 72

SECTION III
OPERATION

3.1 General 73

3.2 Operation 74

3.3 Transmitter Functional Test 74
3.3.0 Quick Operation Check 75
3.3.1 Main Switch ON/OFF/ARM Operation.... 76
3.3.2 Transmitter ID Programming and Self-Test 76
3.3.3 System Integration Test 77
3.3.4 Green ON Lights, Buzzer Sound, and Antenna check.... 80
3.3.5 Transmitter Functional Test for ELT-(S) only.... 81

3.4 Periodic Maintenance (Instructions for Continued Airworthiness).... 86
3.4.1 Secure Inspection.... 86
3.4.2 Corrosion Inspection for Coaxial Cable.... 86
3.4.3 Corrosion Inspection for Remote Wiring Modular Cable..... 86
3.4.4 Expiration Date Check.... 86
3.4.5 Battery Leakage Check.... 86
3.4.6 Operational Test.... 86
3.4.7.1 G-Switch Check.... 86
3.4.7.2 Antenna Check.... 87
3.4.8 Verification of Digital Message.... 87
3.4.9 Verification of Registration 89
3.4.10 Verification of ELT/GPS interface 90
3.4.10.1 ELT to GPS Interface Information 90
3.4.10.2 ELT/GPS Interface Communication Formats.... 91
3.4.10.3 ELT/FMC Interface and Checkout Process 92

3.4.10.4 24-Bit Address Installation Test (mandatory for Installations reprogramming by Ameri-King's authorized dealer) 92
3.4.10.5 GPS Position Test 93

3.5 Periodic Maintenance (Instructions for Continued Airworthiness) for Canadian Installation 94
3.5.1 Regular Periodic Maintenance Test 95
3.5.2 Power output test, Performance Testing 95
3.5.3 Frequency Test / Current Draw Test, Performance Testing 97
3.5.4 Audio Modulation, Performance Testing 99
3.5.5 Transmitter Functional Test 99
3.5.6 Performance Test Marking and Log Book Entry 99
3.5.7 Shipping 99

SECTION IV
REGISTRATION AND RESPONSIBLE USE

4.1 Registration 100

4.1.1 Registration importance 100
4.1.2 Where to register 100
4.1.3 Registration in the United States 100
4.1.4 Registration in Canada 101
4.1.5 Registration outside of the United States and Canada 101
4.1.6 Change of ownership or contact information 101
4.1.7 Lost ELT's 102
4.1.8 Stolen ELT's 102

4.2 Responsibility 102

4.2.1 Responsible Use 102
4.2.2 Preventing false alarms 103
4.2.3 Report false alarms 103
4.2.4 To report false alarms in the United States contact any of the following 103

SECTION V
WARRANTY AND SERVICE

5.1 Limited Warranty 104
5.2 Repair Service 105
5.3 Factory Comprehensive Test Service 105

APPENDIX A

Retrofit Instructions from AK-450 to AK-451 106
Figure 2.3: Dimensional Drawing for Mounting Tray for ELT Main Unit with Optional Multi-axes Acceleration Switch 107
Figure 14.1e: Wiring diagram for AK-451 with Optional Multi axes G switch with 4-wire interconnecting ELT Main Unit and Remote switch unit 108
Figure 14.1f: Wiring diagram for AK-451 with Optional Multi axes G switch with 2-wire interconnecting ELT Main Unit and Remote switch unit 109
Figure 14.1g: Wiring diagram for retrofitting AK-451 with Optional Multi axes G switch with 4-wire interconnecting ELT Main Unit and Remote switch unit, Artex, Pointer, Kannad, ACK Tech, etc. 110
Figure 14.1h: Wiring diagram for retrofitting AK-451 with Optional Multi axes G switch with 2-wire interconnecting ELT Main Unit and Remote switch unit, D&M, Narco, Joliet, etc. 111
Figure 14.2c: Wiring diagram for AK-451 with GPS Position and 3-inch T adapter with optional multi axes G switch with 4-wire interconnecting ELT Main Unit and remote switch unit 112
Figure 14.2d: Wiring diagram for AK-451 with GPS Position and 3-inch T adapter with optional multi axes G switch with 2-wire interconnecting ELT Main Unit and remote switch unit 113

APPENDIX A.1

Quick Operation Check 114

APPENDIX B

Periodic Maintenance Check List with Compliance Cross References 115

APPENDIX C

FAA Action Notice A 8150.3 Emergency Locator Transmitter recommended Supplemental Inspection Procedure (FAR Part 91 Operations) 119

APPENDIX D

Excerpt from FAA AC 91-44A Paragraph 8.a which defines when Battery Replacement may be done under FAR 43.3 (h) as Preventive Maintenance 123

APPENDIX E

FAA Advisory Circular AC.13-2B, Section 37.C 124

APPENDIX F

Registering a 406 MHz Beacon for U.S.A. 125

APPENDIX G

International 406 MHz Beacon Registration Database (IBRD)
Countries Allowing Individual Registration.....128

APPENDIX H

ELT Coding Programming, ID Reader and Maintenance Test, P/N TS-451.....133

APPENDIX I

RTCA DO-160D Environmental Qualification Forms.....145

APPENDIX J

Approval, FAA TSO C-126 / C-91a Equipment Approval dated 07/24/2008.....148
Approval, EASA ETSO 2C-126/2C-91a EASA.IM.210.1102
dated 11/20/2008 150
Approval, Transport Canada dated 11/26/2008.....151
Approval, Industry Canada, ID 2474A-A451PLAFAPS, dated 11/06/2008 153
Approval, Brazil Certificado Anatel, dated 03/31/2009 154
Approval, EASA Minor Change Approval P-EASA.A.C.12674
dated 7/24/2009 155
Approval, EASA Minor Change Approval 10027068, dated 9/3/2009 157
Approval, EASA Minor Change Approval 10026863, dated 8/18/2009 159
Approval, EASA Minor Change Approval 10026866, dated 8/18/2009 206
Approval, Austria for "Historic Aircraft" like PA-18, 19 Series, Bücker T131,
JOB 15, CSS13, dated 4/16/2010 208
Email Response from EASA to Ameri-King regarding Acceptability of
FAA Form 8130-3 Export Form in EU Europe Union
dated 10/2/2009 210
Approval, Japan Civil Aviation Board Approval (coming soon) 212
Approval, COSPAS-SARSAT Type Approval Certificate No.179
dated 09/24/2007 216

APPENDIX K

Material Safety Data Sheet for Battery.....219

List of Figures

Figure A: Front view of ELT 23
Figure B: 3-D view of ELT..... 23
Figure 1: Direction Determination for Fixed Wing Aircraft..... 28
Figure 1.1: Direction Determination for Helicopter 29
Figure 2: Mounting Tray for ELT- (AF)(AP). P/N 451 013..... 30
Figure 2.1: Mounting Tray for ELT- (AF)(AP). P/N 450 013..... 31
Figure 2.1a: Mounting Tray for ELT- (AP) with integral antenna & ELT-(S)
P/N 450 013-2 39
Figure 2.1.1: Optional Adapter Tray for ELT- (AF)(AP). P/N 450 013-1..... 38
Figure 2.2: Holder for ELT- (AF)(AP) P/N 450 014..... 31
Figure 2.2a: Holder for ELT-(AP) with integral antenna
P/N 450 014-1 30
Figure 2.3: Dimensional Drawing for Mounting Tray for ELT Main Unit
with Optional Multi-axes Acceleration Switch..... 107
Figure 3: Mounting Tray with Velcro Holder and Portable Antenna
for ELT- (AF)(AP)..... 32
Figure 4: Reserved
Figure 5: Antenna ground plane for nonmetallic aircraft..... 34
Figure 6: Whip Antenna (451017-1B)..... 37
Figure 6.1: Reserved
Figure 7: Rod Antenna (451017-2A)..... 41
Figure 7.1: Rod Antenna (451017-2A-1)..... 42
Figure 8: Blade Antenna (451017-3A) 45
Figure 9: Integral Portable Whip Antenna (451017-4S)
(Ant ground plane is not required)..... 47
Figure 10: ELT Remote Switch Installation 49
Figure 10.1: Mounting bracket for ELT Remote Unit (Continued)..... 49
Figure 11: Remote Audio Buzzer Monitor P/N 451018 50
Figure 11.1: Buzzer may be fastened directly onto the Remote Switch Unit . 51
Figure 12.1: Interconnecting Wiring Cable between ELT Remote Unit
and Main Unit, Part No. 4510041 52
Figure 12.2: Interconnecting Wiring Cable between ELT Remote Unit
and Main Unit, Part No. 4500041 53
Figure 13: Verify parameter setting..... 60
Figure 14.1a: Wiring diagram for AK-451 with 4-wire interconnecting
ELT Main Unit and Remote Switch Unit 62
Figure 14.1b: Wiring diagram for AK-451 with 2-wire interconnecting
ELT Main Unit and Remote Switch Unit 63

Figure 14.1c: Wiring Diagram for retrofitting AK-451 with 4-wire+ interconnecting ELT Main Unit and Remote Switch Unit, Artex, Pointer, Kannad, ACK Tech, etc. 64
Figure 14.1d: Wiring Diagram for retrofitting AK-451 with 2-wire interconnecting ELT Main Unit and Remote Switch Unit, D&M, Narco, Joliet, etc. 65
Figure 14.1e: Wiring diagram for AK-451 with Optional Multi axes G switch with 4-wire interconnecting ELT Main Unit and Remote switch unit 108
Figure 14.1f: Wiring diagram for AK-451 with Optional Multi axes G switch with 2-wire interconnecting ELT Main Unit and Remote switch unit 109
Figure 14.1g: Wiring diagram for retrofitting AK-451 with Optional Multi axes G switch with 4-wire interconnecting ELT Main Unit and Remote switch unit, Artex, Pointer, Kannad, ACK Tech, etc. 110
Figure 14.1h: Wiring diagram for retrofitting AK-451 with Optional Multi axes G switch with 2-wire interconnecting ELT Main Unit and Remote switch unit, D&M, Narco, Joliet, etc. 111
Figure 14.2a: Wiring Diagram for AK-451 with GPS Position and 3-inch T adapter with 4-wire interconnecting ELT Main Unit and Remote Switch Unit 66
Figure 14.2b: Wiring Diagram for AK-451 with GPS Position and 3-inch T adapter with 2-wire interconnecting ELT Main Unit and Remote Switch Unit 67
Figure 14.2c: Wiring diagram for AK-451 with GPS Position and 3-inch T adapter with optional multi axes G switch with 4-wire interconnecting ELT Main Unit and remote switch unit 112
Figure 14.2d: Wiring diagram for AK-451 with GPS Position and 3-inch T adapter with optional multi axes G switch with 2-wire interconnecting ELT Main Unit and remote switch unit 113
Figure 15: Battery Replacement for ELT Main Unit 69
Figure 16: Battery Pack Replacement for ELT Main Unit (Actual View) 70
Figure 16.1: Battery Cell Replacement for ELT Main Unit (Actual View) 70
Figure 17: Battery Replacement for ELT Remote Unit 71
Figure 18: ELT Front Panels-Main Unit and Remote Unit 78
Figure 19: ELT-(AP)(S) complete assembly with antenna 83
Figure 20: Verify parameter setting 93

SECTION I
GENERAL INFORMATION

1.1 SCOPE

This manual contains information necessary for the installation, test and operation of the model AK-451, Emergency Locator Transmitter, manufactured by Ameri-King Corporation, California, U.S.A.

1.2 OVERVIEW

1.2.1 Description

The Ameri-King AK-451-( ) Series is a FAA TSO'd approved, EASA ETSO'd approved, 406 MHz ELT Emergency Locator Transmitter, Types (AF) Automatic Fixed, (AP) Automatic Portable, (S) Survival. It transmits aircraft GPS/NAV position data, immediately and accurately, on triple (406 Satellite /243 Military /121.5 Civilian) MHz frequencies. The supreme advantage feature is the aircraft GPS/NAV Latitude / Longitude exact position shall be transmitted, within 1 minute, on the very first burst, without waiting for a Polar Orbiting Satellite (could be up to 4 hours). Enhance the accuracy significantly, for the ground search area, from 1-2 kilometers (non GPS/ NAV Position) to 22 meters typical (with GPS/NAV Position). Having a triple frequency insures your distress message reaches both NOAA Satellite Operation and US Air Force AFSR Ground Operation, Search and Rescue Team, with 100% fully confidence, due to transmitting on both 243.0 MHz Military and 121.5 MHz Civilian bands, for immediate ground search dispatch, narrowing the searching time.

The AK-451 ELT Emergency Locator Transmitter is micro controller based equipment. It is extremely reliable equipment, designed to meet TSO-C126 and TSO-C91A requirements, batteries operated and self contained.

The ELT Emergency Locator Transmitter is designed only for emergency use. The model AK-451 may be used as one or more of the following ELT types:

a. <u>Automatic Fixed-ELT (AF)</u>:

The ELT (AF) is designed to be permanently attached to the aircraft before and after a crash. Aural and flashing light monitors are provided to alert the flight crew that the ELT has been activated and is transmitting. It is designed to aid the Cospas-Sarsat satellite and SAR teams in locating a crash site.

The model AK-451 (AF) consists of an ELT main unit, an aircraft-fixed antenna, coaxial cable assembly, remote switch unit, interconnect wiring assembly, a T-adapter connector, an audible buzzer monitor, a mounting tray, and velcro holders.

The ELT (AF) has an automatic activation G-Switch. It is activated automatically upon a crash or manually operated.

b. Automatic Portable-ELT (AF) (AP) with dual antennas:

The ELT (AF) (AP) is designed to be rigidly attached to the aircraft before the crash, but readily removable from the aircraft after a crash. It functions as an ELT (AF) during a crash sequence. The aircraft mounted antenna may be disconnected and a portable antenna (mounted on the ELT mounting tray) is then attached to the ELT. All mentioned procedures require no tools. Flashing light indicator on the ELT is provided to alert the user that the ELT has been activated and is transmitting. The ELT can be tethered to a survivor or a life raft. It is designed to aid the Cospas-Sarsat satellite and SAR teams in locating the crash site or survivor(s).

The model AK-451 (AF) (AP) consists of an ELT main unit, an aircraft-fixed antenna, a portable antenna, coaxial cable assembly, remote switch unit, interconnect wiring assembly, a T-adapter connector, an audible buzzer monitor, a mounting tray, velcro holders and portable soft case..

The ELT (AF)(AP) has an automatic activation G-Switch. It is activated automatically upon a crash or manually operated.

If for any reason, a fixed mounting is not required, the ELT (AF)(AP) can be used as a Portable Device, due to it ‘s manual operated hand use Portability. Check Local and/or national regulations for this issue.

c. Automatic Portable-ELT (AP) with integral antenna:

The ELT (AP) is designed to be rigidly attached to the aircraft before the crash, but readily removable from the aircraft after a crash. It functions as an ELT (AF) during a crash sequence. All mentioned procedures require no tools. Flashing light indicator on the ELT is provided to alert the user that the ELT has been activated and is transmitting. The ELT can be tethered to a survivor or a life raft. It is designed to aid the Cospas-Sarsat satellite and SAR teams in locating the crash site or survivor(s).

The model AK-451 (AP) consists of an ELT main unit with an integral antenna, remote switch unit, interconnect wiring assemblies, an audible buzzer monitor, a mounting tray, velcro holders and portable soft case.

The ELT (AF) has an automatic activation G-Switch. It is activated automatically upon a crash or manually operated.

If for any reason, a fixed mounting is not required, the ELT (AF)(AP) can be used as a Portable Device, due to it ‘s manual operated hand use Portability. Check Local and/or national regulations for this issue.

d. Survival-ELT (S, Category A):

The ELT (S) shall survive the shock, impact and crush tests, after a crash. This type of ELT does not have automatic activation G-Switch and is intended to be removed from the aircraft.

It functions as an ELT (P). Flashing light indicator on the ELT is provided to alert the user that the ELT has been activated and is transmitting. The ELT can be tethered to a survivor or a life raft. It is designed to aid the Cospas-Sarsat satellite and SAR teams in locating the crash site or survivor(s).

The model AK-451-(S) consists of an ELT main unit with integral antenna and a portable soft case.

The ELT (S) has no automatic activation G-Switch. It is activated manually only.

The Main Unit features include:

- ON / OFF / ARM Main Switch
- Green ON Light
- RESET Push Button Switch

The Remote Unit features include:

- ON Push Button Switch
- Green ON Light
- RESET Push Button Switch.

All functions of the AK-451 are under micro-controller control. A self-test routine checks ELT operation and installation, then presents the results as visual and auditory 'error code' to aid in troubleshooting and to indicate status. Software is approved per requirements of RTCA/DO-178B for level D software.

The battery pack consists of four D-size lithium, and is field replaceable. Rated life is 5 years or one hour of use, whichever comes first, as specified by FAR 91.207(c).

Installation kits are available that contain all major components needed to install the beacon.

1.2.2 Application and Equipment Limitation

This manual constitutes FAA approved data as described in AC 43.9-1F, paragraph (h)(2) and AC 43-210, chapter 2, paragraph 201(a)(6) for major alterations. Not all installations are "major"; consult your local FAA ACO for clarification.

In Canada, Installation of an ELT in an aeronautical product is carried out under a Supplemental Type Certificate (STC). This is a separate regulatory requirement and should therefore refer to Ameri-King Document No. ICA-451 for the Operations and Instructions for Continued Airworthiness (ICA).

The conditions and tests required for TSO approval of this article are minimum performance standards. It is the responsibility of those desiring to install this article on a specific type or class of aircraft to determine that the aircraft installation conditions are within the TSO standards. <u>TSO articles must have separate approval for installation in an aircraft</u>. The article may be installed only if further evaluation by the applicant documents an acceptable installation and it is approved by the FAA Administrator. The article may be installed only if performed under 14 CFR parts 43 or the applicable airworthiness requirement. For installations outside of the US, contact your local civil aviation authority for guidance (Ref. TSO-C126 paragraph D).

Lithium battery safety concerns include the possibility of fire, venting violently, and venting of toxic gases (Ref. TSO-C126 paragraph 5.a.(2)).

The AK-451 ELT described in this manual was designed, tested and certified as a complete system including the following components:

- ELT Transmitter w/ integral battery
- ELT Mounting Tray and Velcro Holder
- ELT Antenna and Coaxial Cable Assembly
- ELT Remote Switch and Remote Wiring Cable Assembly
- ELT Audible Buzzer Monitor unit and T-Adapter Connector

<u>Note:</u>

Only Ameri-King approved system components may be used for a TSO approved system.

1.2.3 Certification:

The AK-451 has been certified to the following:

- FAA TSO-C126
- FAA TSO-C91a
- ETSO-2C126 per European Aviation Safety Agency (EASA)
- FAR Part 91 – mandatory automatic ELT requirements
- Cospas-Sarsat T.001

47 CFR Part 87 (FCC requirements) Note: Per FCC regulations 47 CFR § 2.902, the ELT is tested per "Verification" method.

<u>Note</u>:
The AK-451 is certified to meet the requirements of FAA TSO-C126, TSO-C91a and EASA ETSO-2C126 per EUROCAE ED-62. For use outside the US or EASA member states, contact your local civil aviation authority for ELT requirements.

1.2.4 Programming:

Ameri-King will program in any protocol at no charge. The AK-451 supports all available worldwide ELT protocols in long message and short message. For a complete ELT protocol, please see C/S document G.005 and T.001 available at www.cospas-sarsat.com. For use outside the US, please contact your local civil aviation authority for accepted or required programming protocols.

The AK-451 supports the following protocols:

1.2.4.1 User Location Protocols (Long Message):

- Coding ELT with beacon serial identification
- Coding ELT with aircraft operator designator and a serial number
- Coding ELT with aircraft 24-bit address
- Coding ELT with aircraft nationality and registration marking

1.2.4.2 Standard Location Protocols (Long Message):

- Coding ELT with 24-bit address
- Coding ELT with Type approval number and a serial number
- Coding ELT with aircraft operator designator and a serial number

1.2.4.3 National Location Protocols (Long Message):

- National Location Protocol (Coding for ELTs)

1.2.4.4 User (non-location) Protocol (Short Message):

- Serial User Protocol Coded with ELTs Unique Beacon Serial Number.
- Serial User Protocol Coded with the Aircraft Operator Designator and a Serial Number.
- Serial User Protocol Coded with the Aircraft 24-Bit Address.
- Aviation User Protocol Coded with the Aircraft Nationality and Registration Marking.

Note 1: The AK-451 is pre-programmed at the factory using ELT with C/S type approval number and serial number, Standard Location Protocol (Long Message) or Serial User Protocol (Short Message), for US aircraft.

Note 2: The AK-451 is pre-programmed at the factory using ELT with 24 Bit aircraft address, Standard Location (Long Message) or Serial User (Short Message), for Canadian aircraft. Your 24 Bit aircraft address, may be obtained from http://www.tc.gc.ca/aviation/activepages/ccarcs/aspscripts/en/quicksearch.asp

Note 3: There is no electronic connection between TCAS or Mode S systems and the ELT, only the ID number is common. The ELT may accept aircraft GPS/NAV Lat/Long position data, then transmits the position data on the 406 MHz digital long messages.

1.3 TECHNICAL CHARACTERISTICS

SPECIFICATIONS:	**CHARACTERISTICS:**
APPROVALS:	FAA TSO-C126 / C91a, and EASA ETSO-2C126/2C91a

BATTERIES:

4500010-1: Battery Pack, Lithium, LiMnO2, 90 Hrs lasting, 4D cells
Note: For Canadian aircraft installation, use 4500010-1 only.

4500010-2: Battery Pack, Lithium, LiSO2, 87 Hrs lasting, 4D cells

PHYSICAL CHARACTERISTICS:

- **SIZE AND WEIGHT:**

Main Unit:	(4.27”Wx2.95”Hx5.64”L) 1lbs 14oz
Remote Unit:	(1.58”W x 0.65”H x 2.00”L) 1.0 oz
Transport Blade type, 451 017-3:	600 Knots airspeed, 1.4 lbs
Business Rod type, 451 017-2:	350 Knots airspeed, 0.5 lb
General Aviation whip type, 451 017-1:	300 Knots airspeed, 0.25 lb
Portable Antenna, 451 017-4:	(17”L) 4.0 oz
Mounting Tray & Velcro holder:	(4.51”W x 0.75”H x 5.87”L) 4.0 oz

- **MOUNTING HOLE SPACING:**

Mounting Tray:	4 Trapezoid Corners (L1=2.76”; L2=1.76”; H=2.01”)
Remote Unit:	4 Rectangular Corners (1.825”W x 0.490”H)
Fixed Antenna:	7 / 5 / 1 Holes (0.500” Diameter) for Blade / Rod / Whip respectively

- **CASE AND COLOR:**

No Sharp Edges, High Impact, Flame Retorted, Fire Resistant, Waterproof, High, Temperature ABS Plastic, Safety International Orange Color.

- **GENERAL SPECIFICATIONS (STANDARD CONDITIONS):**

  - **TRANSMITTER:**

Operating Frequencies:	406.028 MHz ± 0.001 MHz 121.500 MHz ± 0.005 % 243.000 MHz ± 0.005 % Short term stability ≤ 2 x 10^{-9} /100ms Medium slope -1 to +1x10^{-9} /min Medium Residual variant ≤ 3 x 10^{-9}	
Modulation Characteristics:	Audio Sweep Frequency:	Download
	Sweeping:	(1600-300) Hz
	Sweep Rate:	3 Hz ± 1 Hz
	Modulation Factor:	More than 0.85
	Occupied Bandwidth:	Less than 25 Hz
	Voice Modulation:	Included
Modulation Duty Cycle:	(33-55) % Square Wave AM Continuous	
	Peak Effective Radiated50mW @ 121.5 MHz	
RF Power (PERP):	50mW @ 125/243.0 MHz 5W +/- 1.58W @ 406.028 MHz (35.34 to 38.18) dBm @ 406.028 MHz	

Equivalent Isotropic	100mW (-10dBW) @121.5/243.0 MHz (min)
Radiated Power (EIRP):	6dBW ± 4dB @406.028 MHz (max)
Emission Designator:	16K0G1D for 406.028 MHz 3K20A3X for 121.5 MHz

- **BATTERY REQUIREMENTS:**
  Transmitter Main Unit: Battery Pack consists of 4 cells $LiMnO_2$ or $LiSO_2$ "D" Size
  Remote Unit: DURACELL DL 1/3 NB, or Equiv. Lithium Cell

- **AUTOMATIC CRASH ACTIVATION:**
  Velocity Change of 2.3 ± 0.3 G (4.5 ± 0.5 FPS) per TSO C-126 (DO-204A) and ETSO-2C126 (EUROCAE ED-62) requirement.

- **ANTENNA RADIATION CHARACTERISTICS:**
  Radiation on 121.5, 243.0 MHz, and 406.028 MHz
  Vertically polarized & Omni directional in the Horizontal Plane.

- **CRASHWORTHINESS:** 100g, 23 ms, 6 directions

- **ACTIVATION MONITOR:**

Manual ON and RESET functions are located on both ELT Main Unit and Remote Unit. The two Green ON lights flashing, located on the ELT Main Unit and Remote Switch Unit and a buzzer are to indicate when the ELT is transmitting. Both ELT Main Unit and Remote Unit are self-powered by their internal batteries. Automatic activation is remained, regardless whether the Cable Interconnect between the Main Unit and the Remote Unit is open or shortened.

GPS INTERFACE PROTOCOL:	**Aviation RS-232**	
(Latitude/ Longititude Insert Messages)	**Baud Rate (fixed)**:	9600
	Parity:	None
	Data Bits:	8
	Stop Bits:	1

Garmin International Inc.:

• All Series: 150/ 250/ 400/420/430/ 500/520/530

Honeywell Bendix-King Inc.:

• KLN 88, KLN89, KLN89B, KLN 90, KLN90B, KLN94, KLN900.

Arnav Systems Inc.:

• R50, R50i, STAR 5000, FMS 5000, MFD (Multi-Functional Display).

II Morrow:

• FLYBUDDY, 2001 NMS

Trimble Nav Inc.:

• NAV 1000, NAV 2000, TNL 2100, and TNL3100. The following Trimble systems all require a RS-422 to RS-232 adapter: NAV 3000, TNL 1000, TNL 2000, TNL 2000A, TNL 3000, 2000 APPROACH, 2000 APPROACH PLUS, 2101 APPROACH, 2101 APPROACH
PLUS, 2101 I/O APPROACH, 2101 I/O APPROACH PLUS.

ENVIRONMENTAL TEST SPECIFICATIONS:

- **RTCA DO-204; DO-183**

- **TSO-C126/C91a, RTCA DO-160E ENV. CAT.:** F1XBA (204/183) (204/183)XR(204/183)XXSXXXXAC(204/183)BXXXX (204)

TEMP. AND ALTITUDE:	Category F1
Low Temperature:	-20°C Operating; -55°C Storage.
High Temperature:	+55°C Operating; +85°C Storage.
OPERATING LIFE:	5W @ 406.208 MHz for 24 hrs @ 20°C 50mW @ 121.5 MHz 50mW @ 243.0 MHz (Minimum Requirement throughout a 50 hour period at –20°C)
TEMP VARIATION:	Category B, 10°C minimum per minute
HUMIDITY:	Category A, 95% RH, 50 hours operating
SHOCK:	500G, 4 ± 1msec
IMPACT:	Penetration of 55 lbs mass, 6 drops, 4 surfaces
CRUSH:	1000 lbs, 4 surfaces
VIBRATION:	10G, Sinusoidal, (5-2000) Hz, 3 axes
WATERPROOF:	Category R, 15 minutes Spray, 6 sides
IMMERSION SALT WATER:	Category S, 24 hours Immersion, 160 hours at + 55°C
SALT SPRAY:	Category S, 48 hours exposure to the Salt Fog, and 48 hours drying

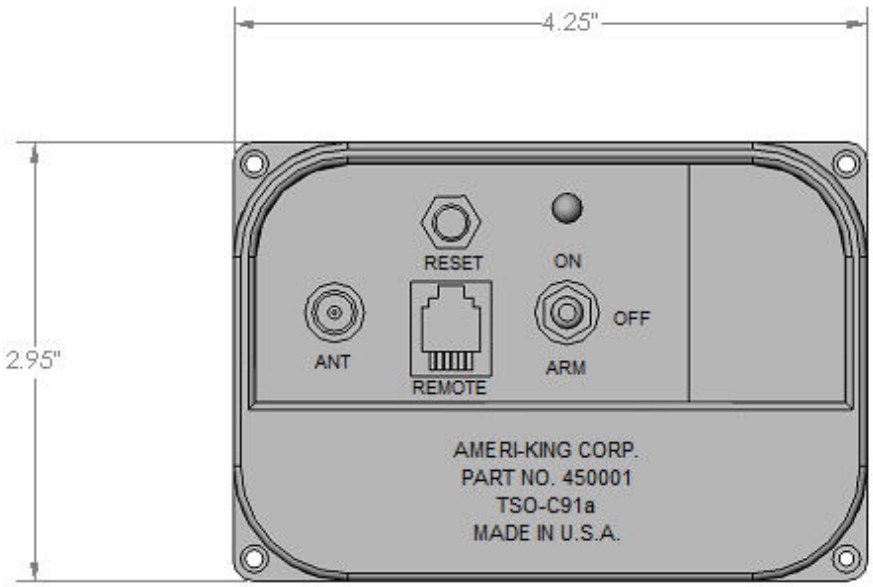

Figure A: Front view of ELT

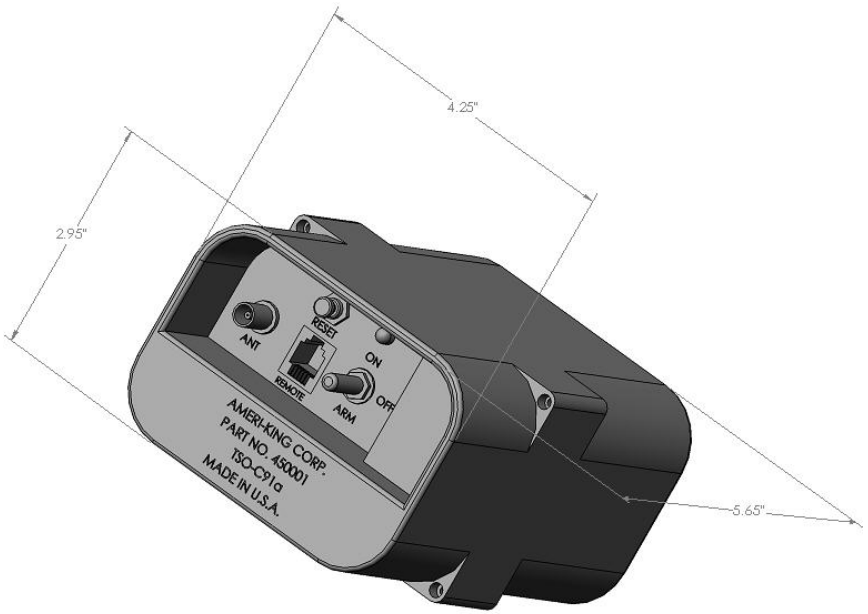

Figure B: 3-D view of ELT

1.4 ACCESSORIES SUPPLIED

1.4.1 INSTALLATION KIT:

PART NO.	DESCRIPTION
450004	Remote Switch Control Unit
4510041 or 4500041	Remote Wiring Cable Assy.
451013 or 450013 / 450013-1	Mounting Tray
451014 or 450014	Velcro Holder
4510171	Coaxial cable assembly
451018	Audible Buzzer Monitor
4510181	T-Adapter connector
451017(-1B)/ (-2A)/ (-3A)/ (-4S)	Antenna Assembly
4510131	Optional Floating Collar
SC-451	Soft Case
SC-451-T	Tether

1.5 FCC LICENSE REQUIREMENT:

In the U.S.A.: Not required per FCC.

Note: Radio station license of the aircraft is required by telecommunication regulations in several European countries.

SECTION II
INSTALLATION AND TEST

2.1 UNPACKING AND INSPECTING EQUIPMENT

Handle with extreme care when unpacking the equipment. Visual inspection of the equipment for evidence of damage incurred during shipment. Any claim should be promptly filed with the transportation company. Save the shipping container to substantiate the claim. Retain the container and packaging material for possible future use.

2.2 MECHANICAL INSTALLATION

The ELT is designed with the installer in mind. All accessories, which are required for complete ELT system installation, are provided, including Mounting Tray, Velcro Holder, Coaxial Cable Assembly and Wiring Cable Assembly.

Because of the critical nature of an ELT, it is very important that the installation be performed according to the following instructions. Installation of the ELT is somewhat unique, as is the installation of any TSO-C126 and TSO-C91a ELT; it requires experience in sheet metal work and avionics. Only licensed technicians should install the ELT.

Many problems associated with the older ELTs were due to poor installation. Therefore, duplicating a previous ELT installation with the AMERI-KING ELT may not be acceptable.

Installations must be made by qualified personnel in accordance with FAA regulations. Duplicating a previous installation may not be acceptable. Refer to the Department of Transportation Regional ACO for detailed information.

Please refer to FAA AC 43.13 for guideline.

RTCA DO-182 recommends:
"All ELT system components which must survive a crash intact, should be attached to the airframe in such a manner that the attachment system can support a 100g load ...in the plus and minus directions of the three principal axes of the aircraft."

RTCA documents may be obtained from:
RTCA, Inc.
1828 L Street, NW
Suite 805
Washington, DC 20036
Tel: 202-833-9339
Fax: 202-833-9434
www.rtca.org
info@rtca.org

Note:
Installation in a pressurized aircraft constitutes a major modification. Consult the Department of Transportation Regional Officer before proceeding.

Note:
Aircraft manufacturers may also have guidance on ELT installation; refer to and follow any applicable Type Approval or STC data for your aircraft. If located outside of the US, follow all applicable regulations for your national authority.

By signing either the aircraft logbooks or the FAA Form 337, you are stating that the installation has been performed in accordance with the current FARs and with the steps and procedures outlined herein.

In Canada, all installations must be performed in accordance with the Engineering and Inspection Manual Part II, Chapter III, Section 3.12.

Remember: Your Professional installation may save someone's life.

2.2.1 ELT MAIN UNIT LOCATION AND INSTALLATION

2.2.1.1 ELT LOCATION DETERMINATION:

Many of the original ELT installations are inadequate as far as unit location and surface rigidity are concerned. Just because the "old" ELT was located in a particular position doesn't mean the "new" ELT should be located there as well.

The tail section of an airplane is least likely to be damaged during a crash and therefore, it provides a good mounting environment for the ELT unit. Refer to Figure 1 for Direction Determination for Fixed Wing Aircraft and Helicopter, respectively.

Accessibility of the unit is an important factor in the location of the ELT. Mount the unit as far aft as practical but where it can be easily retrieved for maintenance.

The mounting surface must be extremely rigid; therefore, mounting the ELT directly to the aircraft skin is unacceptable.

Mounting an ELT directly to the aircraft skin induces "crash hiding" vibration and provides a very poor structural mounting surface. The mounting location must be able to support 100 pounds of force in any direction with no appreciable distortion in the structure. It must also be able to withstand a 350-pound force in any direction without tearing or breaking the aircraft structure.

Please refer to FAA AC 43.13 for guideline.

Following are the FAA guidelines for mounting a TSO-C91a ELT, per RTCA DO-183 paragraph 3.1.8:

1. "The ELT shall be mounted to primary aircraft load carrying structures such as trusses bullheads, longerons, spars, or floor beams."

2. "The mounts shall have a maximum static local deflection no greater than 2.5 mm (0.1 in) when a force of 451 Newtons (100lbs) is applied to the mount in the most flexible direction. Deflection measurements shall be made with reference to another part of the airframe not less than 0.3 meters (3 feet) from the mounting location."

In addition, RTCA Document number DO-182 recommends that "all ELT system components which must survive a crash intact, should be attached to the airframe in such a manner that the attachment system can support a 100g load…in the plus and minus directions of the three principal axes of the aircraft."

The ELT must be mounted with the arrow which is printed on the battery case pointing in the direction of flight. The ELT should be mounted with its longitudinal axis aligned within 10 degrees of the longitudinal axis of the aircraft fuselage. Avoid mounting the ELT near sources of strong EMI/RFI radiation. (See Fig. 1)

If this is a new installation or if the current installation is unacceptable, find a location per the following:

RTCA suggests the aft section of the fuselage. Statistically, this is the least likely section of the aircraft to receive damage in a crash. It is also near the antenna connection, minimizing cable length between the transmitter and antenna. Maintain access for maintenance. If possible, avoid locating the ELT where it will be subjected to chemical fluids such as deicing compounds, cleaning fluids, etc. Over time, these may attack the plastic and metal components.

The mounting location must conform to the requirements of RTCA DO-204 and AC 43.13-2B. DO-204 Sec 3.1.8 states:

"The ELT shall be mounted to primary aircraft load carrying structures such as trusses, bulkheads, longerons, spars, or floor beams (not aircraft skin). The mounts shall have a maximum static local deflection no greater than 2.5 mm (0.1 in.) when a force of 450 Newton's (100 lbs) is applied to the mount in the most flexible direction. Deflection measurements shall be made with reference to another part of the airframe not less than 0.3 meters (1 foot) nor more than 1.0 m (three feet) from the mounting location."

Separate mounting-hole patterns are provided so that, if the AK-451 is replacing an existing ELT listed below, the original mounting holes can be used. Remove the old ELT holder or tray and install the AK-451 mounting tray in its place. Stainless steel hardware is recommended. Use hardware conforming to an accepted standard such as AN or Mil-Spec.

Compatible patterns (See Figure 2.1.1) include:

- ACK Technologies E-01
- Artex 100/110, G406, C406 and B406 series, ELT-200 series
- Narco ELT-910, ELT-10
- Pointer model ELT 3000-XX

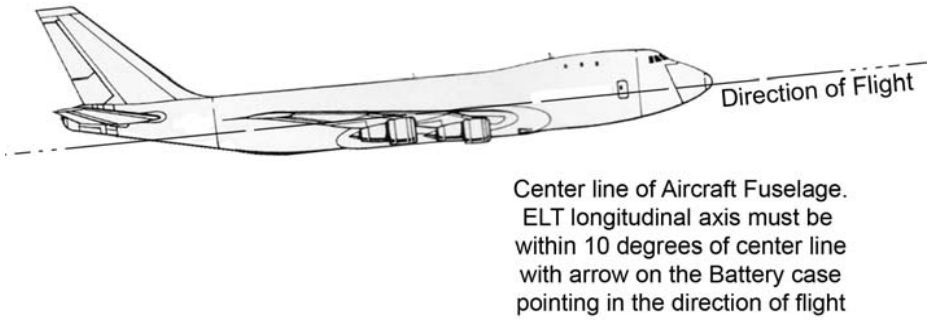

Figure 1: Direction Determination for Fixed Wing Aircraft

Helicopter Installations:
The AK-451-15 or AK-451-12 may be mounted so that the arrow aligns with the longitudinal axis of the aircraft. If necessary, the ELT may be tilted Nose down up to 10 degrees, (see Figure 1.1). The ELT mount may be rotated about the aircraft center axis, i.e., the ELT can be mounted on the floor, walls or over head, so long as it 'points' to the front of the aircraft.

Also, refer to aircraft manufacturer's data (Type Approval or STC information) and/or national regulations regarding installation on helicopters.

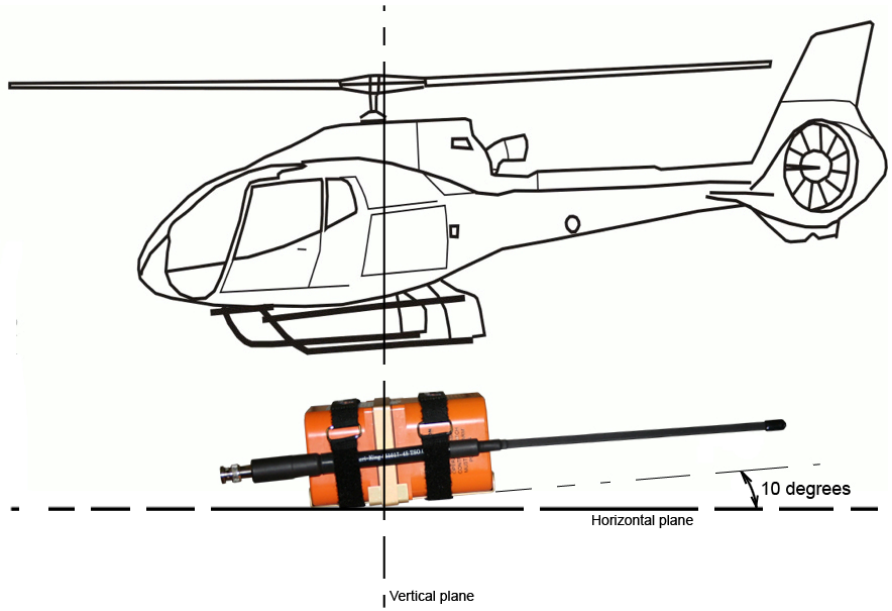

Figure 1.1: Direction Determination for Helicopter

2.2.1.2 MOUNTING TRAY AND VELCRO HOLDER INSTALLATION:

After selecting a suitable location meeting all of the above requirements, drill and mount the ELT Mounting Tray as shown in Figures 2, 2.3, and 3. Mark the 4 holes in trapezoidal locations needed for the tray using the tray as a guide. Be sure the tray aligns within 10 degrees of the longitudinal axis of the aircraft (and in direction of flight). The mounting Tray may be mounted on the Horizontal plane or Side wall, or Overhead, as long as the FORWARD Arrow direction shown on the ELT is adhered.

Note: The purpose of 4 holes in trapezoidal configuration is to assure that both the ELT and mounting tray will be placed in the correct direction **(with the arrow FORWARD direction marking on the ELT must be adhered.)** Therefore, make sure the direction of the 4 mounting holes in trapezoidal configuration is correct.
If a reinforcement (Doubler) plate is needed to meet the rigidity requirements of paragraph 2.2.1.1, fabricate one using the tray as a guide.

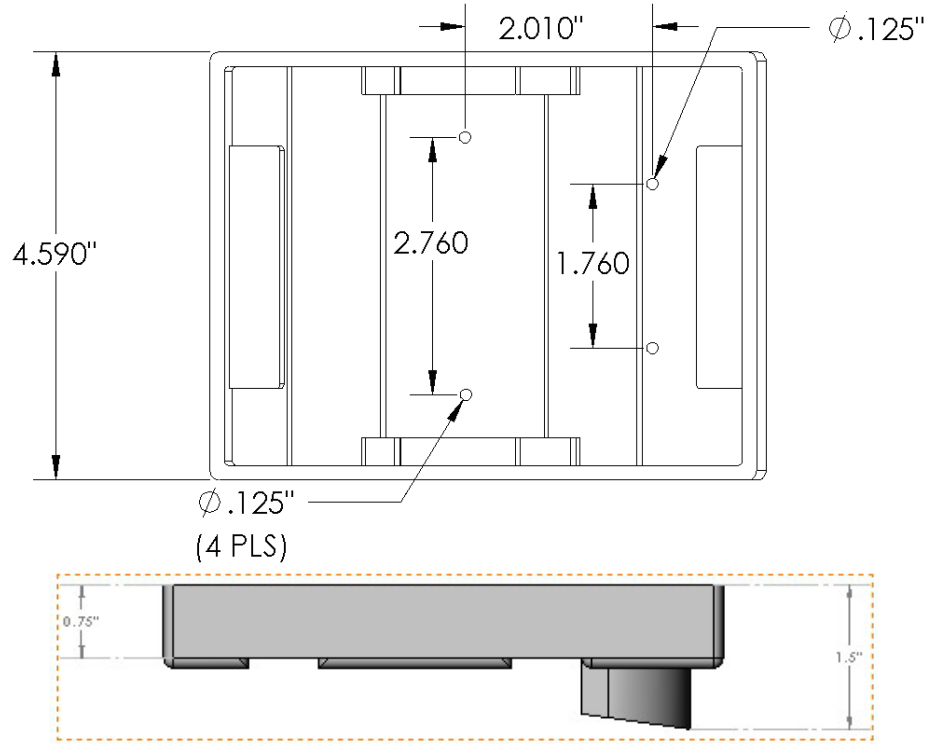

Figure 2: Mounting Tray for ELT- (AF)(AP). P/N 451 013

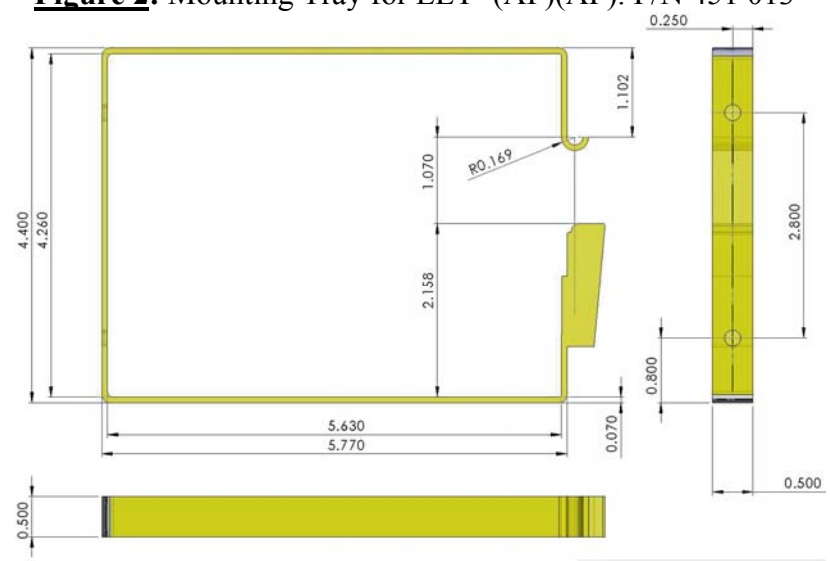

Figure 2.2a: Holder for ELT-(AP) with integral antenna
P/N 450 014-1

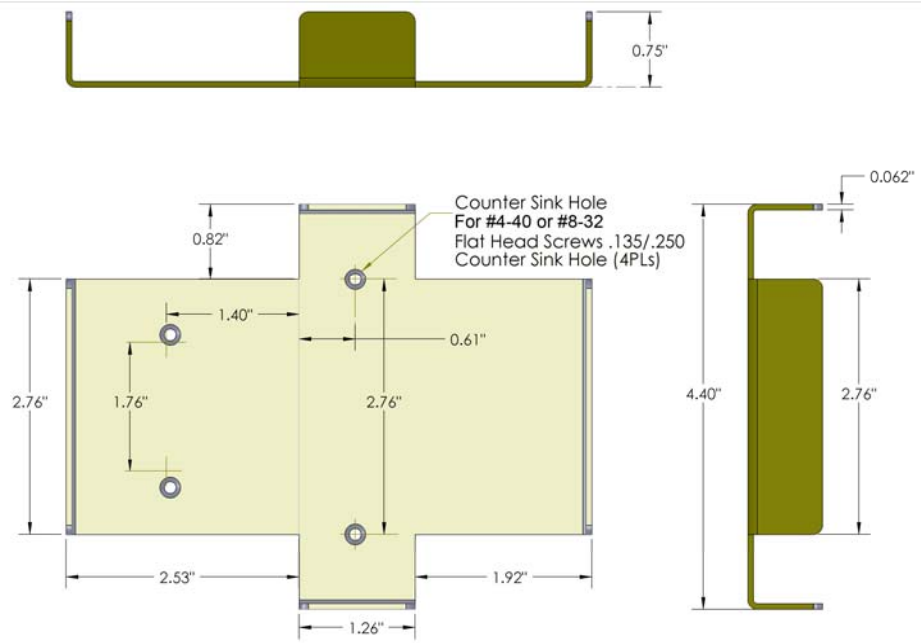

Figure 2.1: Mounting Tray for ELT- (AF)(AP). P/N 450 013

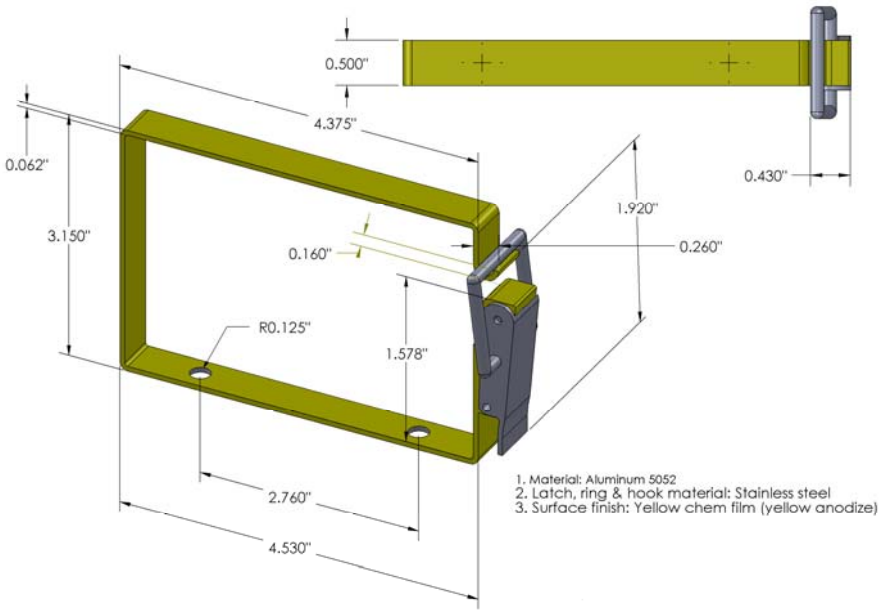

Figure 2.2: Holder for ELT- (AF)(AP) P/N 450 014

Figure 3: Mounting Tray with Velcro Holder and Portable Antenna for ELT- (AF)(AP)

2.2.2 ANTENNA LOCATION AND INSTALLATION

In order to meet the requirements of TSO-C91a and FAR 91.207, an External Antenna must be used. The Portable Antenna (if supplied) with the unit is for use only after the unit has been removed from the aircraft.

It is the responsibility of those desiring to install this article on a specific type or class of aircraft to determine that the aircraft installation conditions are within the TSO standards. <u>All antennas must have separate approval for installation in an aircraft</u>. The article may be installed only if further evaluation by the applicant documents an acceptable installation and it is approved by the FAA Administrator. The article may be installed only if performed under 14 CFR parts 43 or the applicable airworthiness requirement. For installations outside of the US, contact your local civil aviation authority for guidance (Ref. TSO-C126 paragraph D).

Please refer to FAA AC 43.13 for guideline.

2.2.2.1 ANTENNA LOCATION DETERMINATION:

The mounting location of the External Antenna is determined to a great extent by the mounting location chosen for the ELT Transmitter. The Antenna should be mounted as close to the ELT Transmitter as practical. The Coaxial Cable connecting the Antenna to the ELT should avoid crossing aircraft production breaks (i.e. riveted fuselage sections). The Antenna must be within 20 degrees of vertical when the aircraft is in a normal flight altitude. If the Antenna is mounted to a non-metallic airframe, a supplementary ground plane must be installed. The installed Antenna must be able to withstand a static load of 100 times its weight applied to the base of the Antenna along the longitudinal axis of the aircraft. The Antenna should be placed a minimum distance of 3 feet (1 meter) from any vertically polarized communication Antennas (i.e. Antennas radiating in the 118-137 MHz band).

The AK-451 is certified to be used with any of the following antennas:

- Whip antenna Model : 451017-1B
- Rod antenna Model: 451017-2A
- Blade antenna Model: 451017-3A
- Whip antenna Model: 451017-4S

The ELT antenna must be mounted in accordance with the requirements of RTCA/DO-204, Section 3.1.10 and RTCA/DO-183, Section 3.1.10. Locate the antenna at least 30 inches away from other antennas, wires, vertical stabilizers, etc. to minimize distortion of the radiated field and interference with other equipments. The antenna must be installed VERTICALLY (within ± 15° of the vertical plane is acceptable). Ameri-King has no performance data for installations that deviate from the stated requirements.

Each of the above listed antennas requires a ground plane. On aircraft constructed with non-conductive materials, such as composite or fiberglass, a ground plane must be added. Ideally, the ground plane should extend out from the antenna mounting point at least 24 inches in every direction. Many times this is not possible, but an effective plane can be constructed as follow:

A 'doubler' layer of sheet metal, such as aluminum, can be mounted under the aircraft skin. Alternatively, four or more 'radials' fastened to the underside of the fuselage skin can be used to fashion a ground plane. Each radial can metallic type, 22 AWG wire, etc. Tape should be at least 1 inch wide and each radial 24", minimum. The ground plane connects to the shield of the RF antenna connector. Resistance between the ground plane and shield connection should be maintained at 0.003Ω maximum. A star washer should be used between the antenna connector housing and ground plane. Take precautions to guard against corrosion, loosening, etc.

Ground Plane
On fabric-covered aircraft or aircraft with other types of nonmetallic skin, the manufacturer's recommendations should be followed in order to provide the necessary ground plane. An acceptable method of accomplishing this is by providing a number of metal foil strips in a radial position from the antenna base and secured under the fabric or wood skin of the aircraft See diagram below:

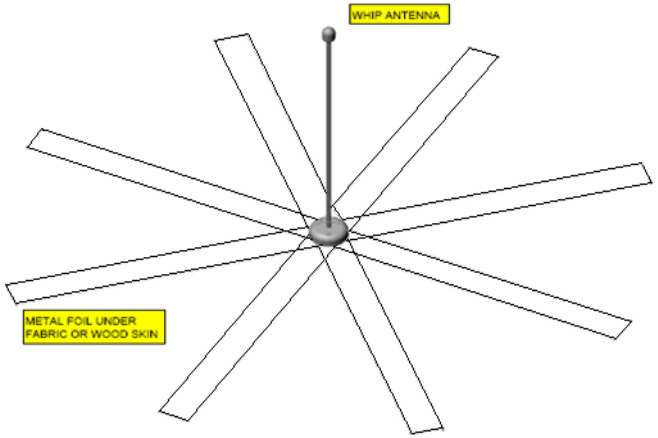

<u>Figure 5</u>: - Antenna ground plane for nonmetallic aircraft

<u>Note:</u> THE LENGTH OF EACH FOIL RADIAL SHOULD BE AT LEAST EQUAL TO THE ANTENNA LENGTH.

An effective, light-weight, ground plane formed from radial strips of copper foil. A doubler may be required to reinforce the installation for resistance to impact, vibration, ice, washing, etc. and can serve as connection points for the radials. Specific antenna installation instructions follow. Also, AC 43.13-2B, paragraph 310 provides additional guidance for antenna installations.

2.2.2.2 ANTENNA INSTALLATION:

Please refer to FAA AC 43.13 for guideline.

After determining the Antenna mounting location per paragraph 2.2.2.1, install the Antenna as shown in Figures 6, 7, 8 and 9.

1. Drill a ½" diameter hole or pattern holes in the aircraft structure at the Antenna mounting location.

2. Install the Antenna and determine if the Antenna meets the static load requirements. If not, a Double should be fabricated. A 100 time of antenna weight force applied in the direction shown in Figure 3 should not cause an appreciable distortion in the aircraft skin.

3. If the Antenna is being mounted on a non-conductive portion of the airframe, a supplementary ground plane must be installed. The supplemental ground plane must have a minimum diameter of 36" and be centered about the base of the Antenna. This maybe provided using a conductive metallic coating painted on the inside of the aircraft structure (SPRAYLAT Series 559 or equivalent) or may be fabricated out of aluminum foil and attached to the inside of the aircraft structure. A Doubler Plate should be used to provide increased surface contact area between the ground plane and the Antenna.

4. Assemble of the Antenna as shown in Figure 3. Make sure the rubber washer, which forms a moisture seal between the Antenna base and the aircraft structure is in place before installing the Antenna. Also make sure the serrated locking washing is in place.

2.2.2.2.1 Whip Antenna Installation: (451017-1B)

The 451017-1B Whip Antenna delivers optimum performance only when installed correctly. To ensure adequate structural strength of the aircraft for associated air loading during flight, use of a backing plate or doublers (not supplied) may be required. Refer to FAA Advisory Circular 43.13-2B for guidance. It is the responsibility of the installation agency to determine the appropriate and adequate antenna installation. The 451017-1B Whip Antenna is designed to provide ELT transmissions from a single BNC Female Coaxial connector.

Location:

The 451017-1B must be mounted on the top of the aircraft to assure maximum visibility of satellites (406 MHz). The best location is the upper aft portion of the fuselage. It should be mounted vertically and away from projections such as a propeller, tail surfaces, or the shadow of larger antennas. Refer to Fig. 6 for a drawing of the antenna.

Installation Preparation:

1. Prepare the surface for antenna installations in such a manner to ensure a ground contact of less than 0.003Ω. If bare metal surfaces are needed for surface preparation they should be treated with Alodine® 1200(or similar compound) to eliminate aluminum oxidation.

2. Drill 0.562" hole in aircraft skin.

Type of aircraft:

The 451017-1B Whip Antenna is designed for installation on fixed wing subsonic aircraft with reciprocating engines and is rated for a maximum airspeed of 300 KIAS (Knots Indicated Airspeed at Sea Level)

Installation:

1. Metal adapter plates are optional but they should be used if the curvature or compound radius of the aircraft skin is such that antennas cannot be directly installed vertically with their plates mounted flat to the aircraft outer surface.

2. Backing plates or doublers should be installed to ensure adequate structural strength for associated air loading during flight. Refer to FAA Advisory Circular 43.13-2B for complete information.

3. Remove the 1/2-28 hex nut and external tooth lock washer from the base of the antenna. Insert antenna connector through mounting hole, make sure the "O" ring remains in the base of the antenna connector flange groove and that the connector has sufficient clearance through the aircraft skin. To mount the antenna, place the lock washer and the hex nut on the inside of the aircraft and sandwich the aircraft skin between the base of the antenna and lock washer followed by the hex unit. Tighten the hex nut to between 25 to 30 inch lbs.

4. Apply a small, smooth fillet with RTV sealant around the periphery of the antenna base to seal of moisture.

5. For maximum signal strength, the length of the antenna coax to the ELT should be as short as possible (use of the standard 6-foot coax is recommended when possible).

Composite Aircraft Installation:

Except for preparation instructions and installation of a ground plane, installation is the same. Refer to FAA Advisory Circular 43.13-2B, Section 310 for complete information. (See Appendix C)

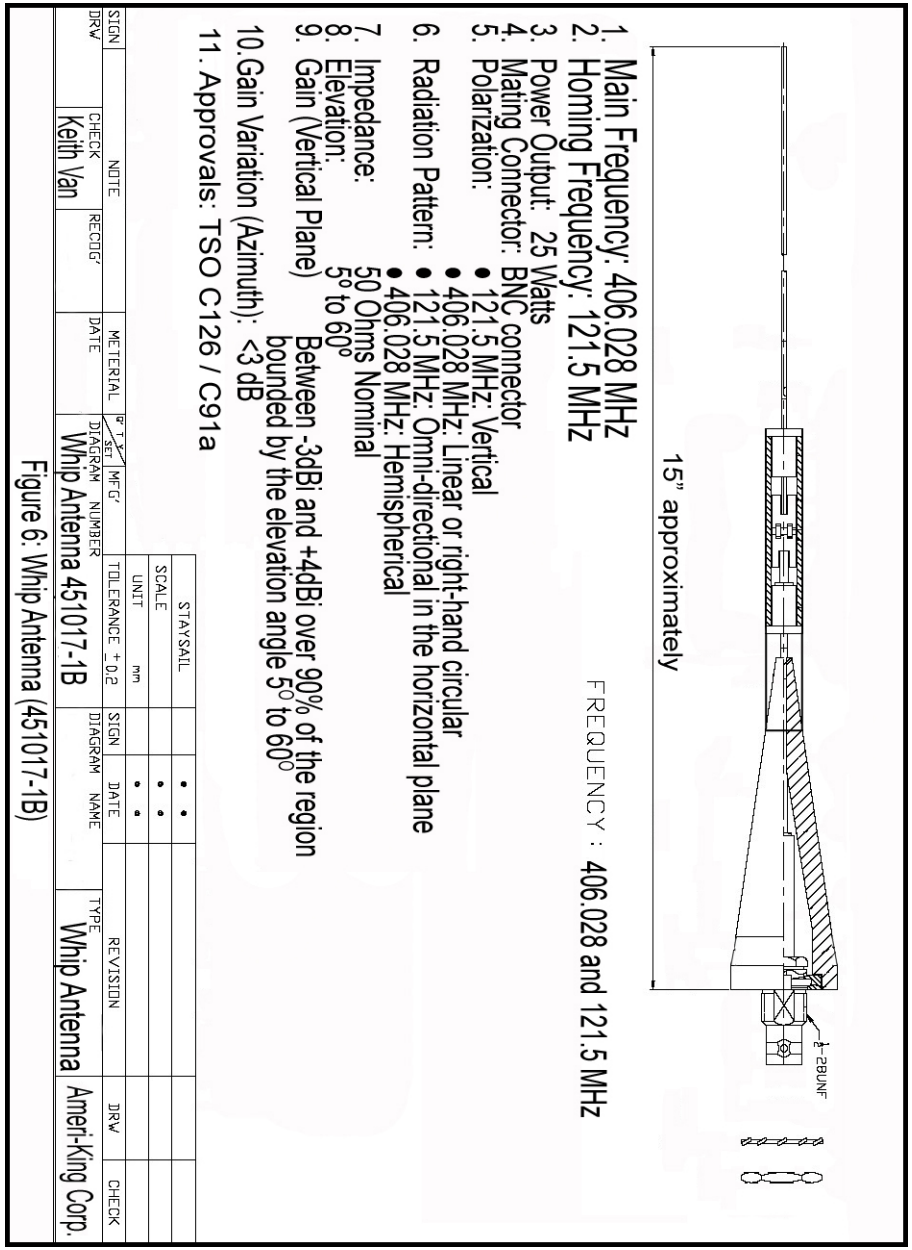

Figure 6: Whip Antenna (451017-1B)

Figure 6: Whip Antenna (Model 451017-1B)

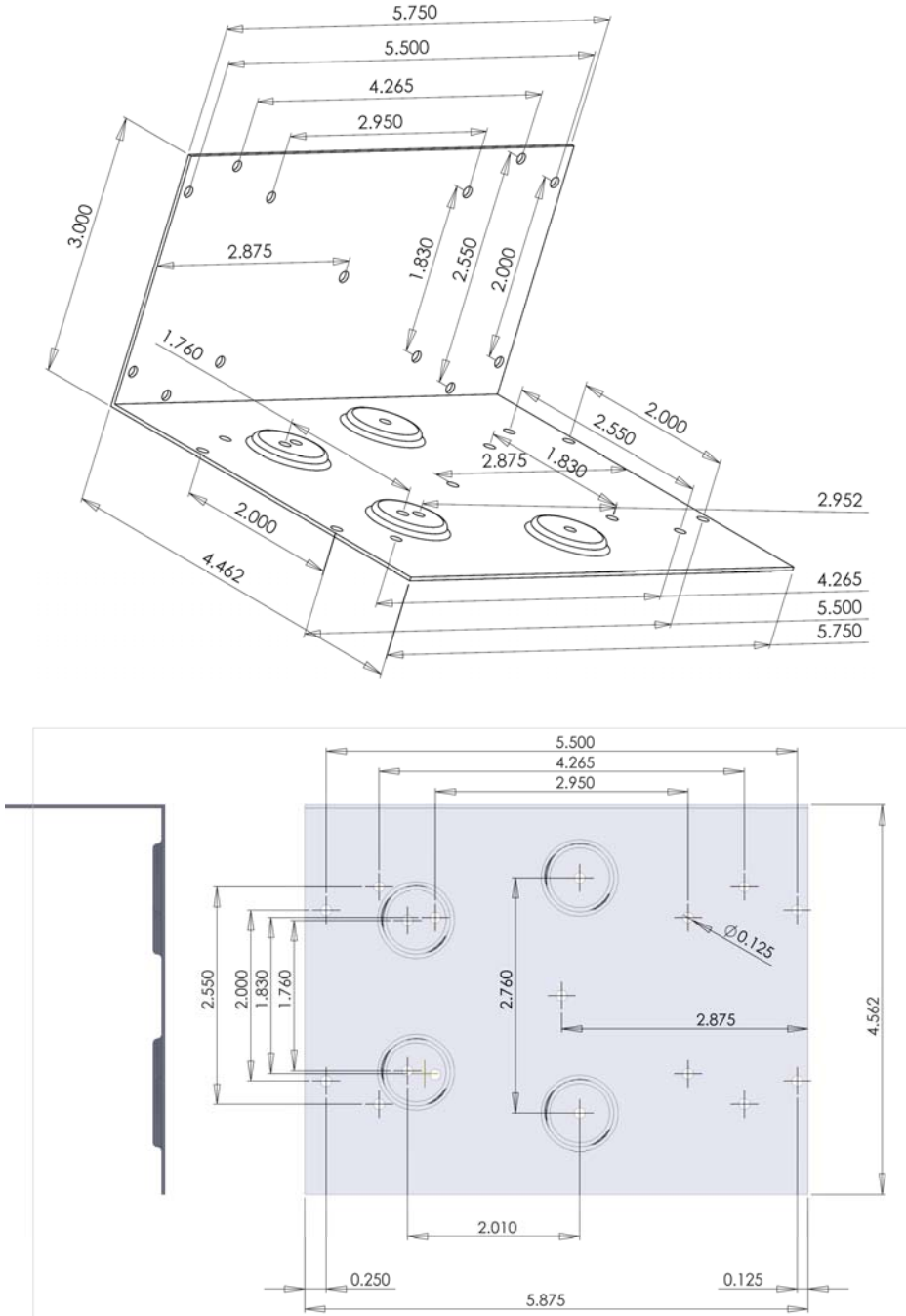

Figure 2.1.1: Optional Adapter Tray for ELT- (AF)(AP). P/N 450 013-1 for ACK Tech / Artex / Narco / Pointer ELT Retrofit

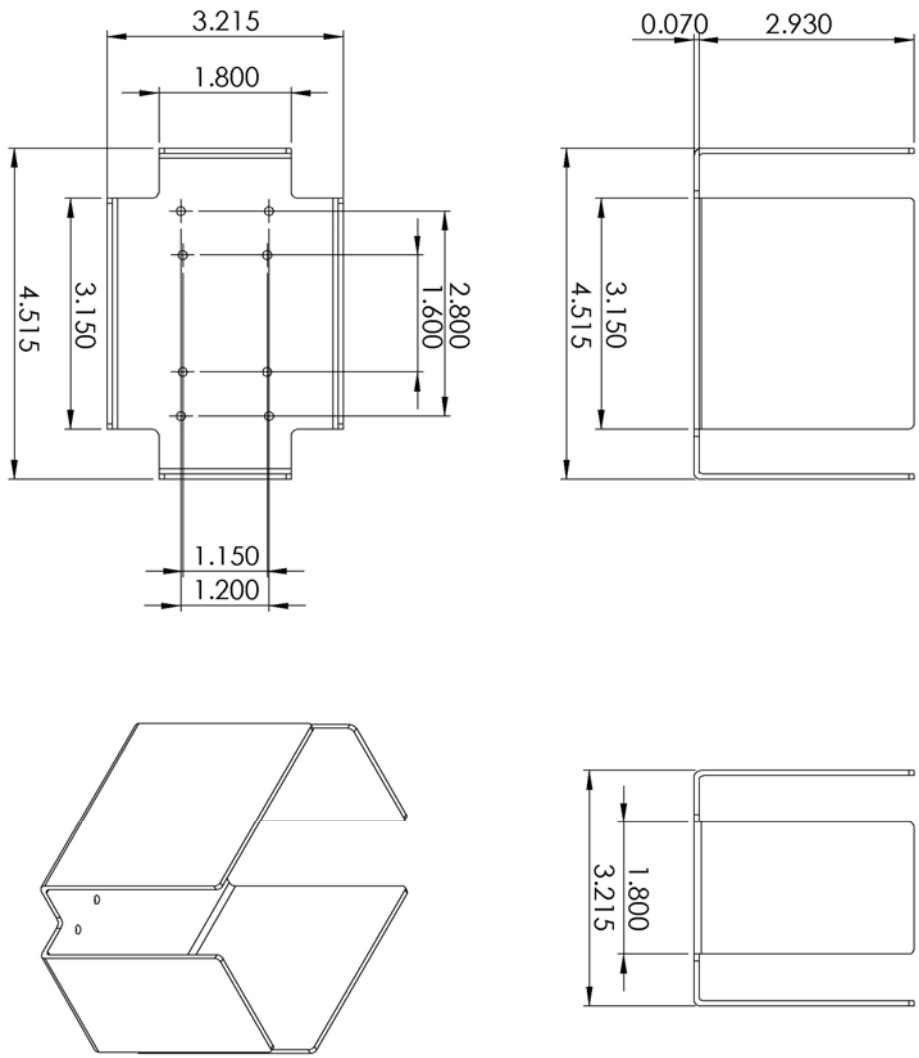

Figure 2.1a: Mounting Tray for ELT-(AP) with integral antenna and ELT-(S)
P/N 450 013-2

2.2.2.2.2 Rod Antenna Installation: (451017-2A)

The 451017-2A Rod Antenna delivers optimum performance only when installed correctly. To ensure adequate structural strength of the aircraft for associated air loading during flight, use of a backing plate or doubler (not supplied) may be required. Refer to FAA Advisory Circular 43.13-2B for guidance. It is the responsibility of the installation agency to determine the appropriate and adequate antenna installation. The 451017-2A Rod Antenna is designed to provide ELT transmissions from a single BNC Female coaxial connector.

Location:

The 451017-2A Rod Antenna must be mounted on the top of the aircraft to assure maximum visibility of satellites (406 MHz). The best location is the upper aft portion of the fuselage. It should be mounted vertically and away from projections such as a propeller, tail surfaces, or the shadow of larger antennas.

Installation Preparation:

1. Prepare the surface for antenna installations in such a manner to ensure a ground contact of less than 0.003Ω. If bare metal surfaces are needed for surface preparation they should be treated with Alodine® 1200 (or similar application) to eliminate aluminum oxidation. NOTE: The 451017-2A Rod Antenna bonds through the base plate, not through the mounting screws.

2. Use the 451017-2A outline drawing on Fig. 7 to determine hole pattern and drill size.

Type of aircraft:

The 451017-2A Rod Antenna is designed for installation on fixed wing subsonic aircraft with reciprocating or turbine engines and is rated for a maximum airspeed of 350 KTAS (Knots True Airspeed at 25,000 feet).

Installation:

1. Metal adapter plates are optional but they should be used if the curvature or compound radius of the aircraft skin is such that antennas cannot be directly installed vertically with their plates mounted flat to the aircraft outer surface.

2. Backing plates or doublers should be installed to ensure adequate structural strength for associated air loading during flight. Refer to FAA Advisory Circular 43.13-2B for complete information.

3. Mount the antenna using four 100° countersink #8-32 stainless steel machine screws and associated hardware. Tighten to 20” lbs max.

4. Apply a layer of anti-corrosion bonding grease between aircraft skin and bottom of antenna.

5. Apply a small, smooth fillet with RTV sealant around the periphery of the antenna base to seal out moisture.

6. For maximum signal strength, the length of the antenna coax cable to the ELT should be as short as possible (use of the standard 6 foot coax cable is recommended when possible).

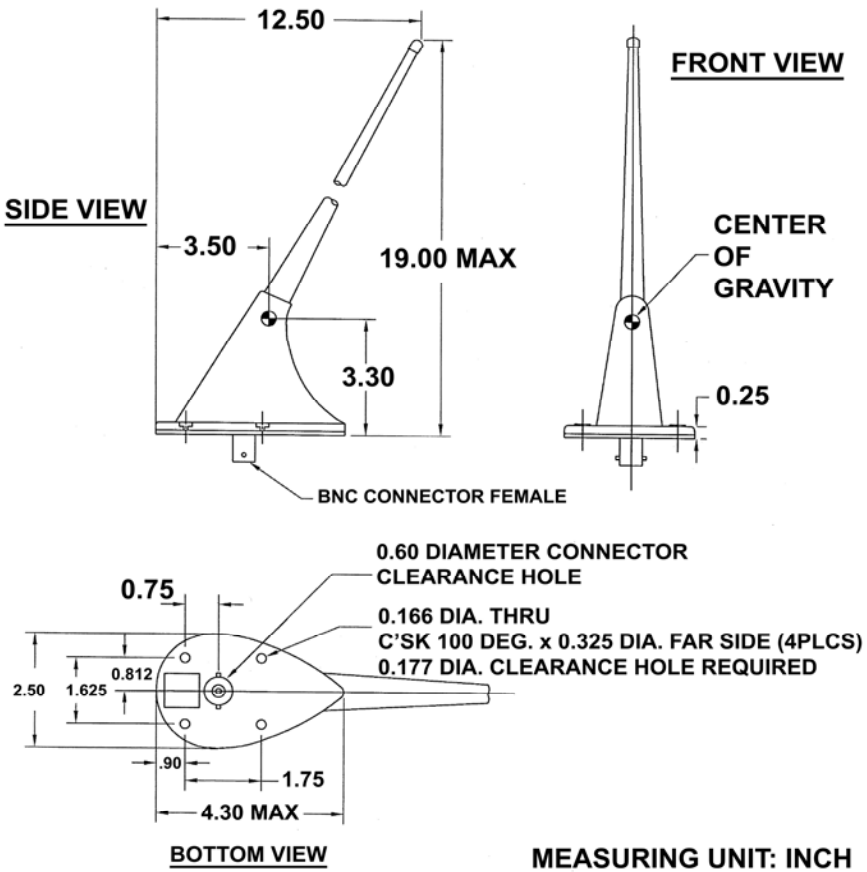

1. Finish: White Polyurethane Paint over Intumnescent
2. Frequencies: 121.5, 243.0, 406.0 MHz
3. VSWR: 121.5 MHz 1.3:1 max; 243.0 MHz 1.3:1 max; 406.0 MHz 1.3:1 max
4. Polarization: Vertical
5. Radiation Pattern: Omnidirectional
6. Power rating: 25 Watts
7. Mating connector: BNC Female
8. Impedance: 50 Ohms Nominal

Figure 7: Rod Antenna 451017-2A

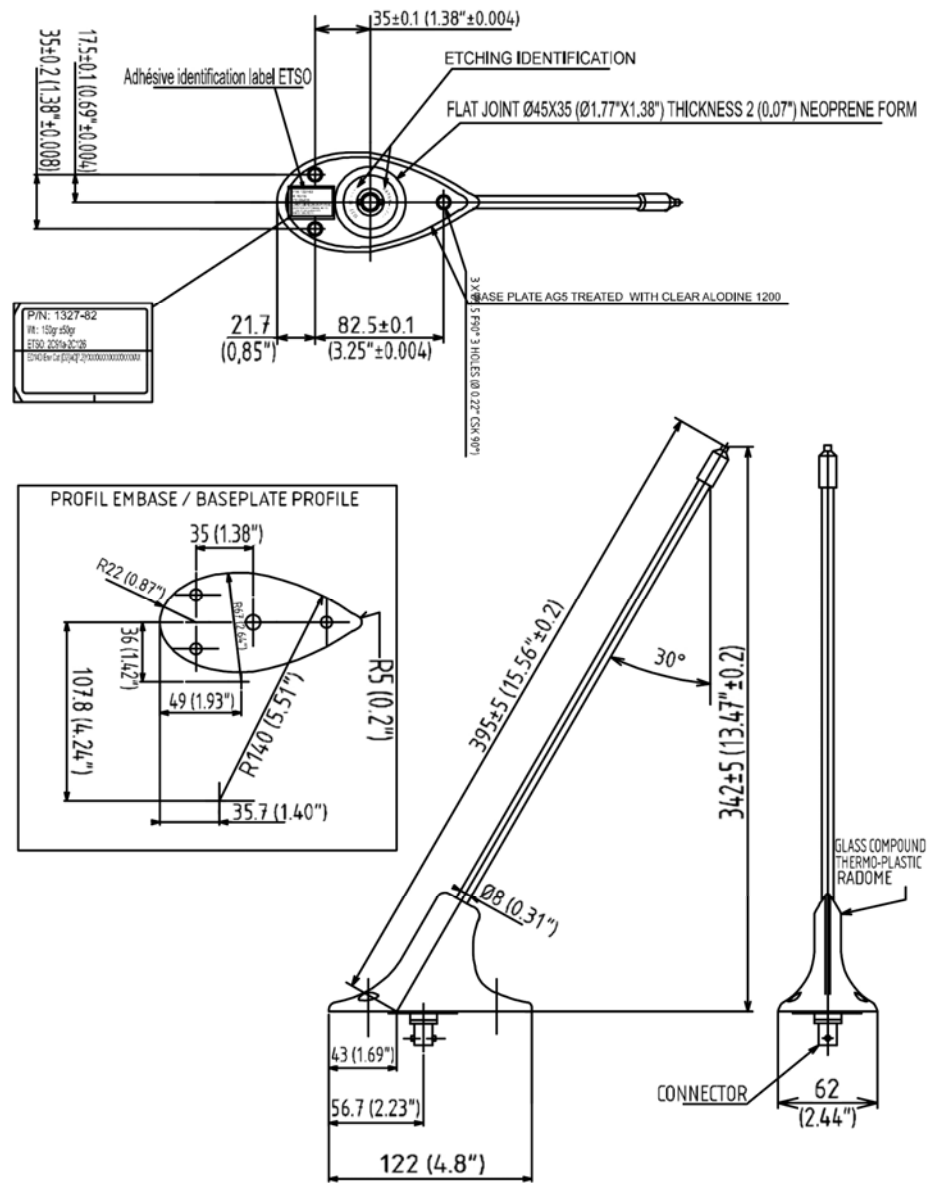

Figure 7.1: Rod Antenna 451017-2A-1

2.2.2.2.3 Blade Antenna Installation: (451017-3A)

Installations must be made by qualified personnel, and in accordance with Federal Regulations. The 451017-3A Blade Antenna delivers optimum performance only when installed correctly. To ensure adequate structural strength of the aircraft for associated air loading during flight, use of a backing plate or doublers (not supplied) may be required. Refer to FAA Advisory Circular 43.13-2B for guidance. Look for Advisory Circulars under the Regulatory/Advisory heading on the FAA home page, www.faa.gov. It is the responsibility of the installation agency to determine the appropriate and adequate antenna installation. The 451017-3A Blade Antenna is designed to provide ELT transmissions from a single BNC Female Coaxial connector.

Location:

The 451017-3A must be mounted on the top of the aircraft to assure maximum visibility of satellites (406 MHz). The best location is the upper aft portion of the fuselage. The specific mounting location is very important. A flat surface is the best antenna mounting location. Do not mount the antenna on the curvatures and uneven surface. It should be mounted vertically and away from projections such as a propeller, tail surfaces, engine exhaust, or the shadow of larger antennas. Do not over torque the mounting screws in an attempt to reduce gaps between the antenna base plate and aircraft mounting surface. If gaps over 0.020” appear between the base plate and mounting surface, use of a mounting saddle is recommended. Refer to Fig. 8 for a drawing of the antenna.

Installation Preparation:

Prepare the surface for blade antenna installations in such a manner to ensure a ground contact of less than 0.003Ω. The electrical bonding between the antenna and the aircraft ground is very important. If this bonding is not done properly, the performance of the antenna may become distorted and nulls may appear in the antenna radiation pattern. This, in turn, may cause erratic navigational readings or signal drop out. The electrical bonding of the antennas to the aircraft skin is best accomplished by direct metal-to-metal contact of the antenna base to the aircraft skin. To accomplish this, the aircraft paint in the mounting area will need to be removed. If bare metal surfaces are needed for surface preparation they should be treated with Alodine® 1200(or similar compound) to eliminate aluminum oxidation. After installing the blade antenna, make sure the electrical bonding of the antenna base blade to the aircraft meets the requirement of less than 0.003Ω.

Type of aircraft:

The 451017-3A Blade Antenna is designed for installation on fixed wing subsonic aircraft with reciprocating engines and is rated for a maximum airspeed of 600 KIAS (Knots Indicated Airspeed at Sea Level)

Installation:

1. Mounting the Blade antenna using #10-32 SS machine screws and associated hardware and torque to 20 in-lbs.

2. For BNC connector, drill a 0.6250” (5/8”) diameter hole.

3. The most important in installing Blade antenna is the electrical bonding between the base plate antenna and the aircraft skin (metal-to-metal) rather than thru the mounting screws as some other antennas.

4. A layer of anti-corrosion bonding grease should be applied between the aircraft skin and the base of the antenna.

5. Metal adapter plates are optional but they should be used if the curvature or compound radius of the aircraft skin is such that antennas cannot be directly installed vertically with their plates mounted flat to the aircraft outer surface.

6. Backing plates or doublers should be installed to ensure adequate structural strength for associated air loading during flight. Refer to FAA Advisory Circular 43.13-2B for complete information.

7. Remove the 1/2-28 hex nut and external tooth lock washer from the base of the antenna. Insert antenna connector through mounting hole, make sure the "O" ring remains in the base of the antenna connector flange groove and that the connector has sufficient clearance through the aircraft skin. To mount the antenna, place the lock washer and the hex nut on the inside of the aircraft and sandwich the aircraft skin between the base of the antenna and lock washer followed by the hex unit. Tighten the hex nut to between 25 to 30 in-lbs.

8. Apply a small, smooth fillet with RTV sealant around the periphery of the antenna base to seal of moisture.

9. For maximum signal strength, the length of the antenna coax to the ELT should be as short as possible (use of the standard 6-foot coax is recommended when possible).

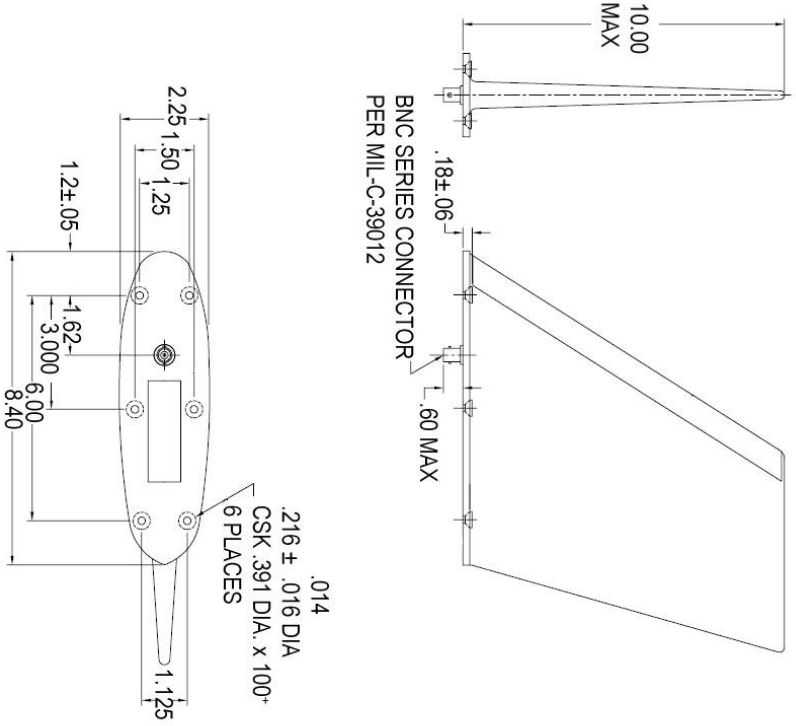

Antenna specifications 451017-3A

1. Main Frequency: 406.028 MHz
2. Homing Frequencies: 121.5 and 243.0 MHz
3. Power Output: 25 Watts
4. Mating Connector: BNC Female
5. Polarization:
   - 121.5 MHz and 243.0 MHz: Vertical
   - 406.028 MHz: Linear or right-hand circular
6. Radiation Pattern:
   - 121.5 MHz and 243.0 MHz: Omni-directional in the horizontal plane
   - 406.028 MHz: Hemispherical
7. Impedance: 50 Ohms Nominal
8. Elevation: 5º to 60º
9. Gain (Vertical Plane) Between -3dBi and +4dBi over 90% of the region bounded by the elevation angle 5º to 60º
10. Gain Variation (Azimuth): <3 dB

Figure 8: Blade Antenna 451017-3A

2.2.2.2.4 Integral Antenna Installation: (451017-4S)

The integral Antenna 451017-4S is fastened to the ELT-(AP) with Integral Antenna , ELT-(S). **This Antenna required no ground plane. The antenna ground plane installation is not required.**

Type of aircraft:

The 451017-4S Integral Antenna is designed for installation for any aircraft including fix wing and helicopters.

Installation:

Installation is not required.

The AK-451 (AP) with Integral Antenna and AK-451-(S) are the best ELT configurations for composite aircraft because the Antenna ground plane is not required.

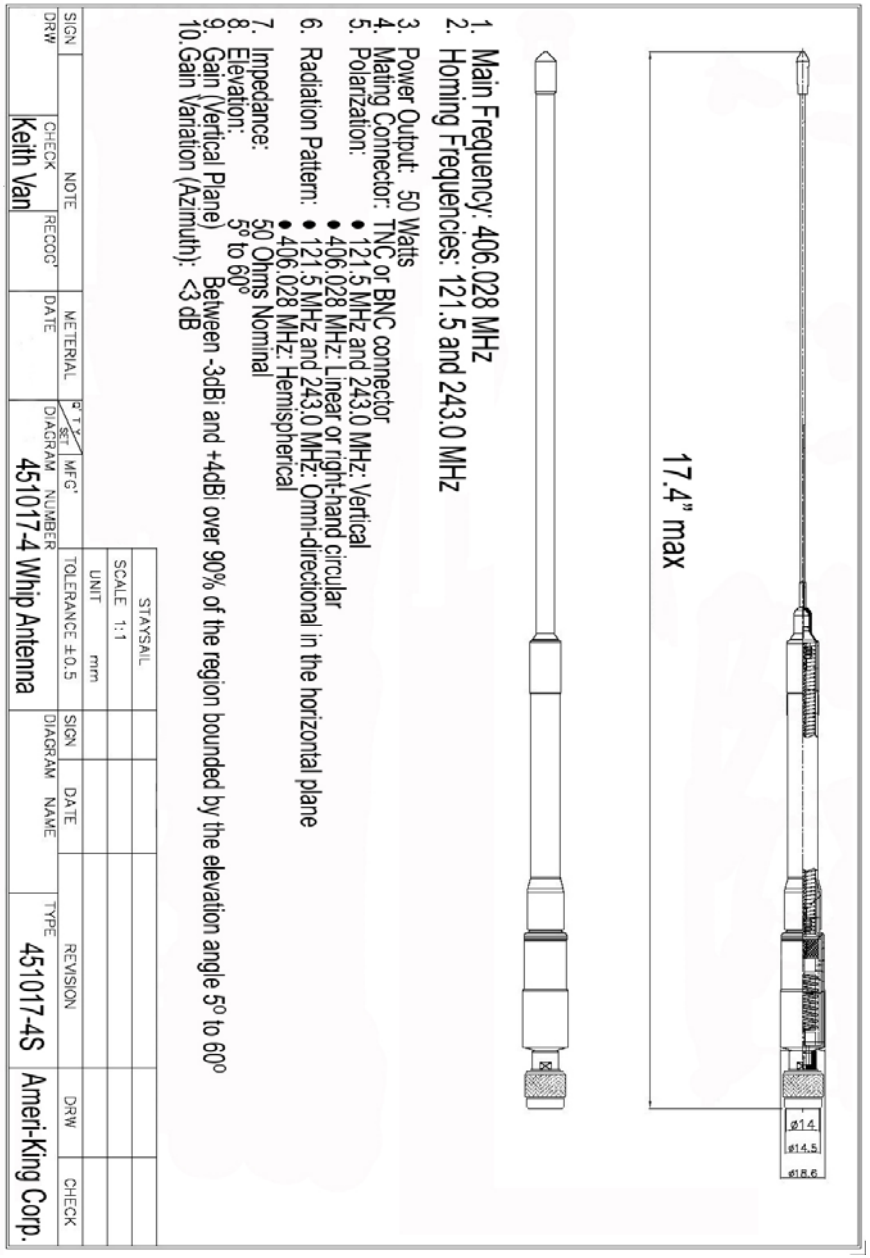

Figure 9: Whip Antenna (451017-4)

Figure 9: Integral Portable whip Antenna (451017-4S)
(Antenna ground plane is not required.)

2.2.3 ELT REMOTE UNIT LOCATION AND INSTALLATION

The ELT Remote Unit assembly must be mounted in the cockpit where the pilot can easily reach the switches and see the light.

Note:
The Remote Switch Unit is required by TSO-C126 and TSO C91a, for AK-451-(AF)(AP) Configurations. It is not optional.

It is strongly recommended that the Remote Unit be located in an area that is part of the pilots normal instrument scan.

Mark a cutout for the cockpit panel switch with the dimensions shown in Figure 10. Install the Remote Unit assembly by fitting it into the cutout, using four 4-40 screws and Nylock nuts.

If the unit is to be mounted in a location that does not have a flush mounting surface (i.e. beneath the panel glare shield), an angle bracket should be fabricated. See Figure 10.1

TSO-C126/RTCA DO-204 paragraphs 1.3 and 2.2.6.1 state, "A remote control to operate and monitor the transmitter shall be required if the ELT unit is not readily accessible from the pilot's position."

Note: For Canadian aircraft installation, a placard displaying the following warning will be placed near the ELT remote unit:

"FOR AVIATION EMERGENCY USE ONLY.
UNAUTHORIZED OPERATION PROHIBITED."

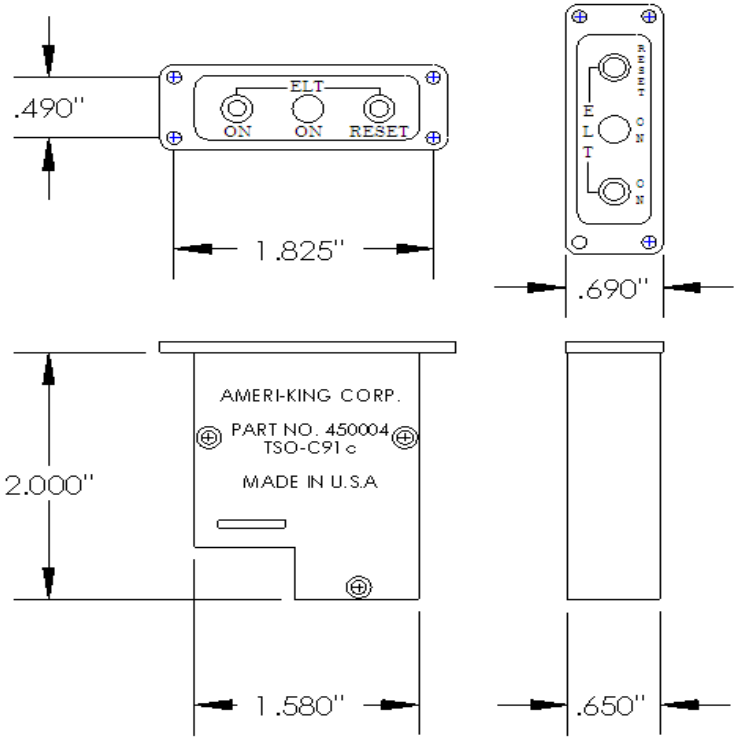

Figure 10: ELT Remote Switch Installation

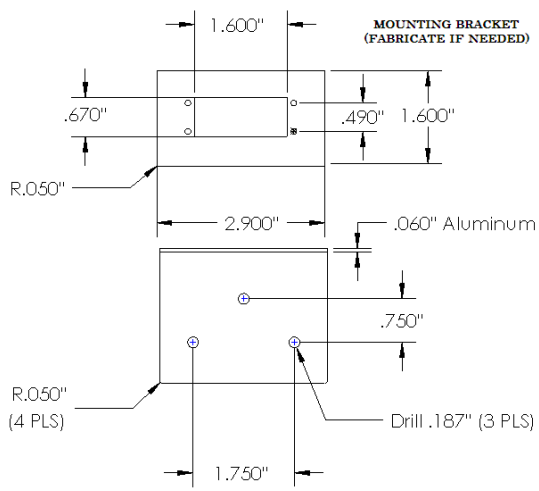

Figure 10.1: Mounting bracket for ELT Remote Unit (Continued)

ELECTRICAL SPECIFICATIONS: (TEST CONDITION:TEMP. 25° C)

Type	Unit	FBPB2925A (2FEET)
Rated voltage	VDC	3-6
Operating Voltage	VDC	1.5-16
*Rated Current	mA	3
* Min Sound Output at 30 cm	dB	95
*Resonant Frequency	Hz	3000±500
Tone		Single
Lead Wire/Lead pin material		UL1007 AWG28
Operating Temperature	° C	-20 - +60
Storage Temperature	° C	-30 - +70
Weight	ounce	0.5

*Value Applying at Rated Voltage(DC).

DIMENSIONS UNIT: Inch

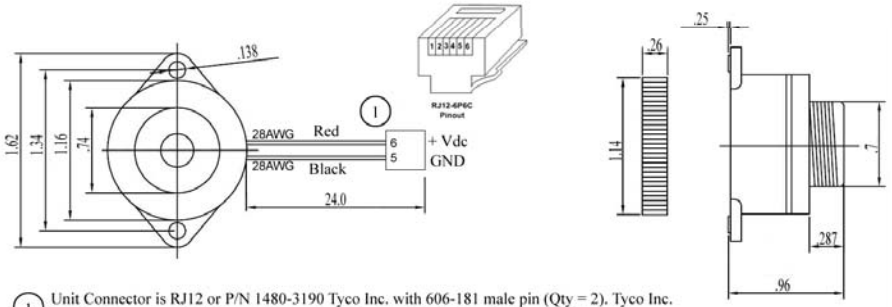

① Unit Connector is RJ12 or P/N 1480-3190 Tyco Inc. with 606-181 male pin (Qty = 2). Tyco Inc.
Mating Connector P/N 1480-7200 Tyco Inc. with 606-171 female pin (Qty = 2). Tyco Inc.

Housing Material:ABS777

Figure 11: Remote Audio Buzzer Monitor P/N 451018

Figure 11.1: Buzzer may be fastened directly onto the Remote Switch Unit

2.2.4 Wiring interconnecting harness

The wiring cable is 25 feet long, if the cable is too long, looping the wire in order to have shorter wiring, is acceptable. Please contact Ameri-King if you need shorter or longer wiring cables. Use only Ameri-King supplied interconnects wiring cables.

Note:
The interconnecting wiring is a straight wiring configuration, i.e. Pin 1 to 1, Pin 2 to 2, Pin 3 to 3, and Pin 4 to 4, Pin 5 to 5. To verify straight wire configuration, look at both Modular plugs RJ-12, **side by side** (both clips of the plugs must be on the same side). You must see wiring color codes. Yellow/Green/Red/Black/Orange **alternatively**, on both plugs

The wiring configuration is not a telephone application. Telephone application is a cross wire configuration, i.e. Pin 1 to 6, Pin 2 to 5, and Pin 3 to 4. To convert from cross wire to straight wire configuration, just simply reverse either plug upside down.

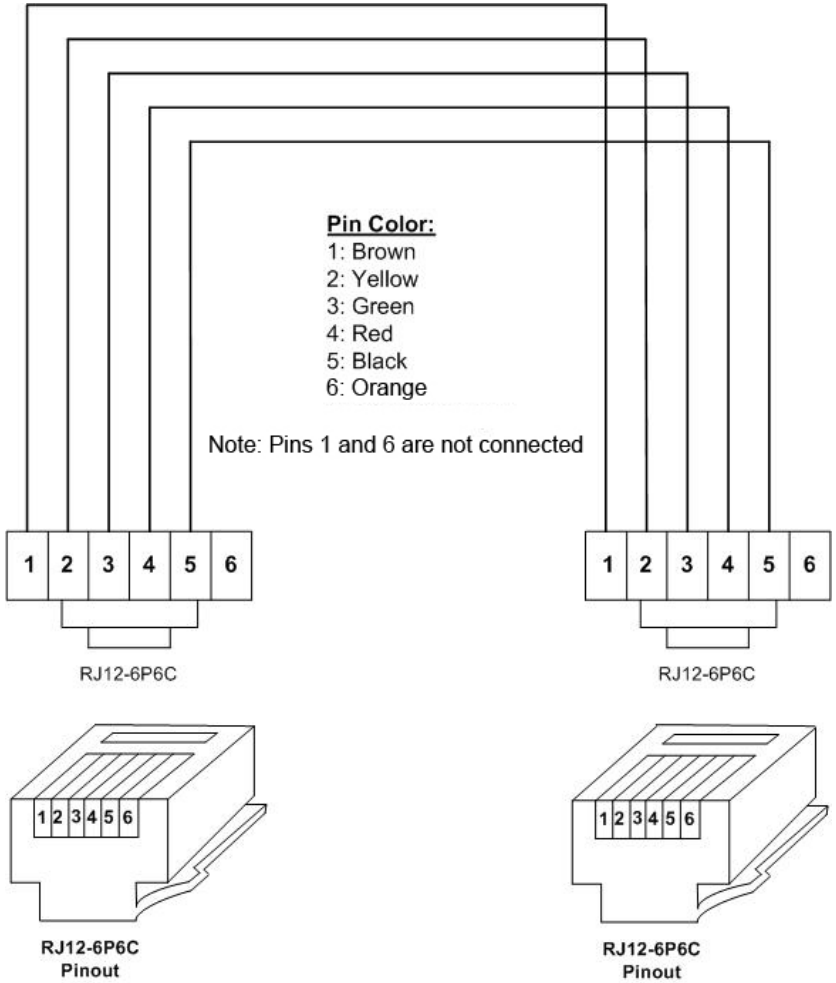

Figure 12.1: Interconnecting Wiring Cable between ELT Remote Unit and Main Unit, Part No. 4510041-5

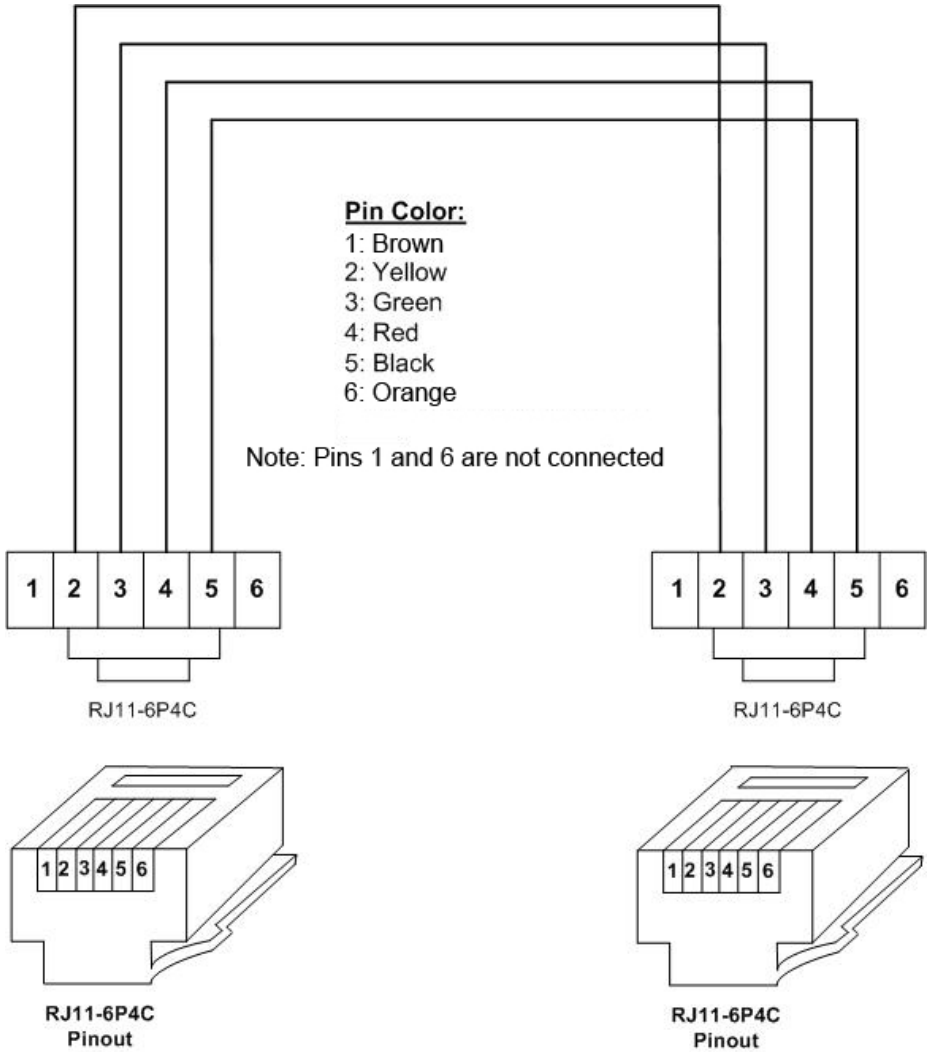

Figure 12.2: Interconnecting Wiring Cable between ELT Remote Unit and Main Unit, Part No. 4500041-4

2.2.5 Audible Monitor Location and Installation:

A warning buzzer is required for TSO-C126 approval. The buzzer (P/N 451018) is powered by the ELT system and, therefore, independent of the aircraft power system. When the ELT is activated, the buzzer 'beeps' periodically. The time between pulses lengthen after a predetermined transmitter 'on' time. While the buzzer may be located anywhere on the aircraft, it is recommended that the buzzer be placed in the cockpit, near to the Remote Switch Unit. This buzzer operates in tandem with the ELT panel indicator and would serve as a redundant indicator.

Note: RTCA/DO-204 indicates installation in the cockpit.
The buzzer can be mounted on the instrument panel, using the plastic bezel nut. Suggested mounting is with the buzzer orifice with an open hole on the instrument panel, adjacent to the Remote Switch Unit. The 2 mounting ears at its base may be used as an extra optional mounting secure on the instrument panel.
Another option is tie wrapped the Buzzer, onto the Aircraft Wiring Harness, or attached by velcro onto or behind the Instrument Panel, or fasten directly onto the Remote Switch Unit (See Figure 11.1).

Connect the Buzzer wiring to the Remote Switch Unite via T-Adapter connector. The rear of the buzzer can be sealed with RTV; however, the front must be left open.

Note: If the Buzzer for AK-451 is located inside the ELT Main Unit, it is powered by the ELT Main batteries. The ELT Main Batteries will continue to supply power to the Buzzer for 78 hours at -20 deg C, at end of 5 years battery life.

Connect Harness:
With the harness installed (See Fig. 14) into the Remote Switch Unit. Install the ELT in its mounting tray, securing with the Velcro strap. Connect the buzzer wires.

Note: Splicing may be necessary on the buzzer wire, If more than 4' long. Connector is to be sealed with RTV after system has been tested.

Once all tests have satisfactorily been completed and all harness connections have been verified to be correct, the connectors at the remote cockpit switch and the ELT should be sealed to prevent moisture from getting into the wire entry holes.

Seal using an electronics grade ('neutral cure'), non-slumping RTV such as GE Silicones RTV162, Dow Corning 748RTV or Silastic 1080RTV.

Helicopter Installations:
Refer to aircraft manufacturer's data (Type Approval or STC information) and/or national regulations regarding installation on helicopters. The ELT may be installed in a helicopter with the ELT unit mounted with "Direction of Flight" arrow pointing downward at a 10° angle to the horizontal plane rather than parallel to it.

2.2.6 WIRING CABLE INSTALLATION

After installing the ELT Main Unit, Antenna and Remote Unit in the aircraft, install the Coaxial Cable between the ELT Main Unit and the Antenna. The Cable should not cross any production break and must have a reasonable amount of slack at the ELT Main Unit. This slack is necessary to allow for easy removal of the Coax Cable during maintenance and when needed as a Portable Device. If a longer Coaxial Cable than the one supplied with the unit (6 feet), it may be fabricated using RG-142(MIL-C-17) Cable and AMP 227079-5 Connectors or King KC-59-162 BNC Connectors or their equivalent. Insertion Loss of the Cable should not exceed 0.8 dBm. Secure the Coaxial Cable using Tie Wraps or other appropriate methods. Make sure the Cable is protected from abrasion. RG 400/U or equivalent is acceptable.

The Remote Switch Unit is connected to the ELT Main Unit via means of RJ-12 Standard Type Modular Connectors. The RJ-12 Connecting Cable is included with each ELT. To install the Cable, connect each modular plug at end of the Interconnecting Cable to the ELT Main Unit Jack and the ELT Remote Switch Unit Jack via T-Adapter Connector. (See Figures 14.1, 14.1.1)

Connect buzzer wiring and GPS wiring harness assembly P/N 4510042 to the ELT Remote Switch Unit via T-Adapter Connector as well. (See Fig. 14.1, 14.1.1, 14.1.2, and 14.2).

Note: All wiring harness assemblies (P/N 4510041/4510042) were Qualification tested, including Flame Test per TSO C126/RTCA DO-204 requirements.

Avoid running this cable near sources of strong EMI/RFI radiation. Secure the Cable along its run with Tie wraps or other suitable methods. The interconnecting cable may be shortened or a longer cable of up to 200 feet may be used if required. Wiring per M22759/18 or /35 (24 AWG) or equivalent is acceptable.

2.3 ELECTRICAL INSTALLATION

Please refer to FAA AC 43.13 for guideline.
Since both the ELT Main Unit and the Remote Unit have their own internal batteries, there is no electrical connection required between the entire ELT system and the Aircraft Electrical Power System. The audible buzzer is powered by the Remote Unit internal battery.

2.4 POST INSTALLATION TEST

Please refer to FAA AC 43.13 for guideline.
After completing the mechanical installation, **ensure the ELT Main Unit must be mounted with the FORWARD arrow marking adhered.** The following Post Installation Function Tests must be performed. Regulations require that Transmitter Tests only be done during the first 5 minutes of each hour and must not last for more than 3 audio sweeps (1.5 seconds). If you are at a location where there is an FAA Control Tower or other monitoring facility, notify the facility before beginning the tests.

Note: Press **RESET** anytime to turn off unwanted transmission.

2.4.0 QUICK OPERATION CHECK

Note: Refer to Appendix A.1 for Quick Operation Check in sequence order.

2.4.0.1. ELT Main Switch @ ON position: ELT swept Tone must be heard on the VHF Radio @121.5 MHz. The 2 LEDs flashing (4 sec OFF, 1 second ON), synchronized with the Buzzer sound (4 sec OFF, 1 sec ON).

2.4.0.2. ELT Main Switch @ ARM position: Both LED Lights and Buzzer must illuminate and sound for 4 sec, then extinguish.
This is to make sure LED and Buzzer are properly powered.
Note: Press **RESET** anytime to turn off unwanted transmission.

The ELT will then automatically enter Self test mode. Self test takes 25 sec.
If ELT Self test is passed, No light illuminate, no buzzer sound.
If ELT malfunctions, the LED Lights and buzzer will show 1 flash or 2 flashes, or 3 flashes or 4 flashes etc. Refer to Operation Manual paragraph 2.4.4 for details.

Next, in order to check G Switch, Throw the ELT forward and backward, 2-3 times, the ELT must activate, ELT swept Tone must be heard on the VHF Radio @121.5 MHz. The 2 LED lights flashing (4 sec OFF, 1 sec ON), synchronized with the Buzzer sound (4 sec OFF, 1 sec ON).

Next, Press either RESET Button, no ELT swept tone heard on the 121.5 MHz VHF radio. Both LED Lights and Buzzer must be extinguished.

Next, Press the ON Switch on the Remote Switch Unit, ELT swept Tone must be heard on the VHF Radio @121.5 MHz. The 2 LED lights flashing (4 sec OFF, 1 sec ON), synchronized with the Buzzer sound (4 sec OFF, 1 sec ON).

2.4.0.3. For normal operation, leave the ELT Main Switch @ ARM position at all times.

No ELT swept tone heard on the 121.5 MHz VHF radio. No LED light illuminates, No buzzer sound.

Detail Operation Check:

2.4.1 Monitor 121.5 MHz using the Aircraft Communication Receiver or a Portable Hand Held Receiver. **Important: The Squelch must be turned all the way UP (Max) to hear he sweep tone on most receivers.**

2.4.2 Place the Main Switch on the front of the ELT Main Unit in the "ON" position and verify that the Audio Sweep Tone can be heard on the COM Radio. Verify that both the Green ON lights located on the ELT Main Unit and the ELT Remote Unit are flashing. Verify the buzzer is heard…at a flash rate and a beeping sound of 1 second ON, 4 seconds OFF.
Place the Main Switch in the "OFF" position. Verify that the Audio Sweep Tone is ceased and the two Green ON lights are extinguished.

2.4.3 Place the Main Switch on the ELT Main Unit in the "ARM" position.
Wait for 25 seconds.
While seated at the Pilots normal operating position, press the "ON" button on the Remote Switch Unit. Verify that the Green ON lights is flashing, and a beeping sound at a rate of 1 second ON, 4 seconds OFF and is readily visible from the Pilots operating position. Verify that the Audio ELT Sweep Tone can be heard on the Com Receiver.

Push the "RESET" button on the Remote Unit. Verify that the Audio ELT Sweep Tone is ceased. Verify the two Green "ON" lights are extinguished and the buzzer sound is silent.

Note: Always perform the tests within the first 5 minutes of the hour. Notify any nearby control tower of your intensions, in accordance with AC 43.13-2B, Section 12-22, Note 3. If outside of the US, always follow all local or national regulations for testing of ELT's.

Warning!
Do not allow test duration to exceed 5 seconds. Any time the ELT is activated it is transmitting a 121.5 MHz distress signal. If the unit operates for approximately 50 seconds, a "live" 406 MHz satellite distress signal is transmitted and is considered valid by COSPAS-SARSAT satellite system.

2.4.4. ELT Self Test:
Place the main switch position from "OFF" to "ARM." The buzzer sounds, and the 2 ELT Green "ON" lights shall illuminate for 4 seconds, then extinguish. After 25 seconds, a 406 MHz test signal is transmitted. However it is specially coded as a "self-test" signal that is ignored by the COSPAS-SARSAT satellites.

Verify that both the ELT Green "ON" lights (located on the ELT Main Unit and the ELT Remote Unit) must remain extinguished and no buzzer sound after 25 seconds. Verify Audio ELT Sweep Tone is silent on the Com Receiver.

Activate the ELT using applied force. The direction forward force activation is indicated on the ELT. The AK-451-(AF) (AP) ELT can be activated by using a rapid forward (throwing) motion coupled by a rapid reversing action. Verify that the ELT has been activated by use of the Wattmeter, the Airplane's VHF Radio Communications Receiver when tuned to 121.5 MHz, or other means (see Note 1). The ELT must then be reset by pressing either the RESET push button located on the ELT main unit or the ELT Remote Unit.

Note 1: This is not a measured check. It only indicates that the G-Switch is working.

Detail Test Procedure for ELT ID Programming and Self Test:

Turn the main switch from the "OFF" position to the "ARM" position. The Buzzer sound and the 2 Green ON lights shall illuminate for 4 seconds, then extinguish. This is to allow coding programming during the next 20 seconds window and self-test for 1 second thereafter.

The ELT may be ID coding programming during the aforementioned 20 seconds window period. If no programming happened the ELT will then enter the Self Test Mode for 1 second thereafter.

Self Test takes 25 sec. Self-test results (after 25 seconds,) is:

If the self-test is passed, the Green ON light is steadily extinguished and no buzzer sound. ELT swept Tone must be silent on the 121.5 MHz VHF Radio.

If the self-test is failed, the Green ON light flashes as defined below:

1 flash: Internal Data stored in Memory at fault.
2 flashes: Distress ID stored in Memory at fault.
3 flashes: Battery voltage is low < Useful Life Battery Voltage setting.
4 flashes: Vcc supplies for F3, F2, or F1 at fault.
5 flashes: F3 RF power level < 33 dBm @ 406.028 MHz
7 flashes: F1/F2 VHF RF power level < 17 dBm @ 121.5/243 MHz.
9 flashes: PLL locked in F3 or F1 or F2 at fault.
Continuous flash: no F3/F2/F1 RF output power, ELT shuts down completely.

Note:

The self-test mode that transmits a 406 MHz test code pulse monitors certain system functions before returning to the ARM mode. The 406 MHz test pulse is ignored by any satellite that receives the signal, but the ELT uses this output to check output power and correct frequency.

- Self-test is 520 ms long message burst on the 406 MHz signal. Synchronization pattern is 011 010 000.
- Self-test is then 121/243 MHz (VHF) Continuous Wave during 1s.
- During Self Test, ELT swept Tone must be silent on the 121.5 MHz VHF Radio.
- If No Antenna or No coaxial cable connected, the ELT may or may not 5 flashes.

2.4.5 ELT Self Test Schedule:

We recommend that the ELT be tested every month. Follow the steps outlined above. Total allowable test is 60 minutes as determined by FAR 91.207 and RTCA DO-204. After this time has been accumulated a 3-flash error may be presented after the self-test. The battery must be replaced at this point for the ELT to remain in compliance. Always follow ELT testing requirements per local or national authorities.

2.4.6 GPS Position Test (If GPS is connected) (for using TS-451 Computer Test Set or equivalent):

Note: Per FCC Regulation, this test should be conducted inside a RF shielded room or an ELT RF shielded box. Dummy 50 ohm Load should be used.

- Connect the AK-451 with ELT Computer Test Set TS-451.
- Turn the switch of the ELT to "ON" position.
- Verify the following setting (See Figure 13.) From the Hyper Terminal window (or equivalent RS-232 window), Click File -> Properties -> Settings tab. Click OK to go back to Hyper Terminal window.

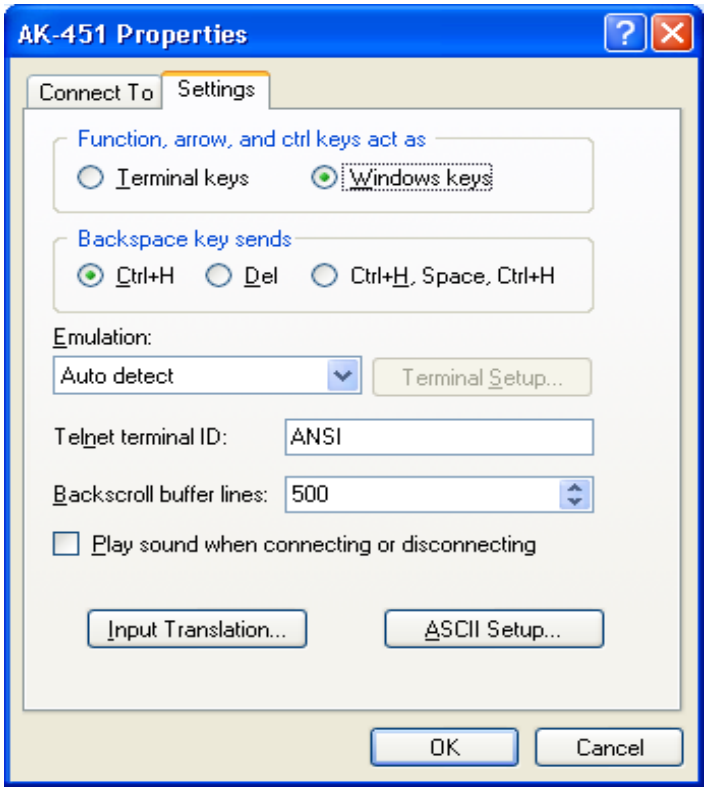

Figure 13: Verify parameter setting

Waiting for 50s, verify the 36 Hex digits (ignore first 6 digits). The last 30 Hex digits will be used for Cospas-Sarsat Decode program, in order to see the Latitude, Longitude Position.

IMPORTANT NOTE: IN NORMAL OPERATION, THE MAIN SWITCH LOCATED ON THE ELT MAIN UNIT MUST BE SELECTED AT "ARM" POSITION AT ALL TIMES.

2.4.7 Antenna Check:

A low quality AM Broadcast Radio Receiver or Equivalent Test Equipment should be used to determine if energy is being transmitted from the Antenna. When the Antenna of this Radio (tuning dial on any setting) is held about 6 inches from the activated ELT Antenna, the ELT Aural tone will be heard (see note below). The ELT must be reset by pressing either the RESET push button located on the ELT Main unit or the ELT Remote Unit.

Note: This is not a measured check, but it does provide confidence that the Antenna is radiating with sufficient power to aid search and rescue. The Aircraft's VHF Receiver, tuned to 121.5 MHz, may also be used. This Receiver however is more sensitive and could pick up a weak signal even if the radiating ELT's Antenna is disconnected. Thus, it does not check the integrity of the ELT System or provide the same level of confidence as does an AM Radio.

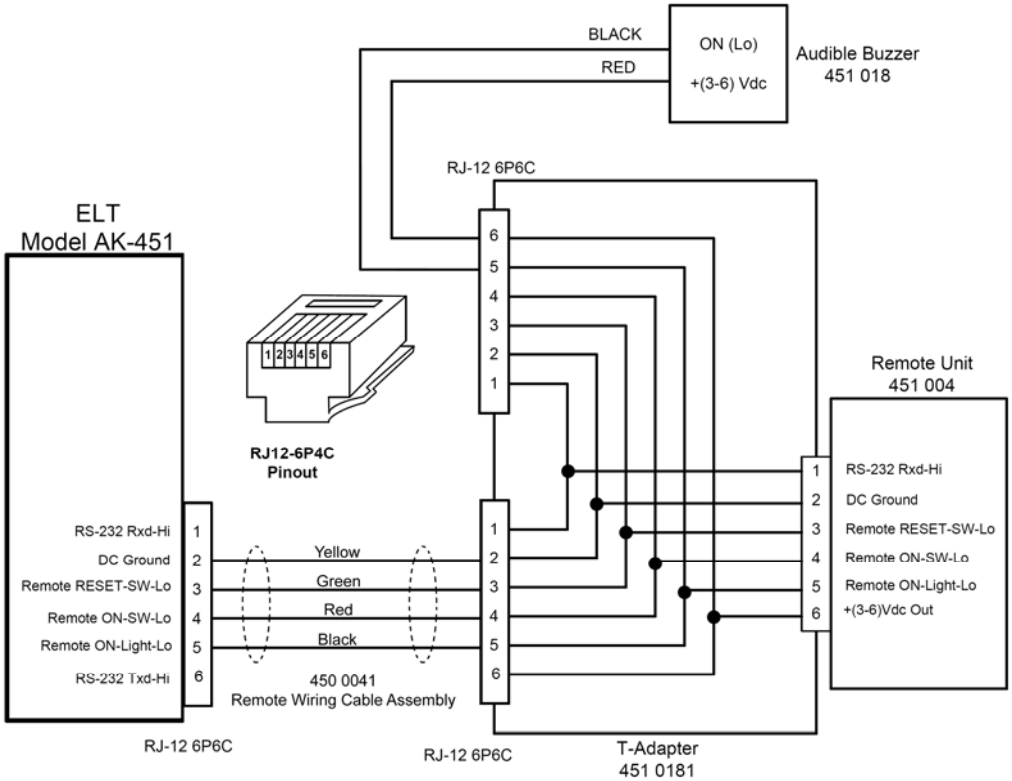

Figure 14.1a: Wiring Diagram for AK-451 with 4-wire interconnecting ELT Main Unit and Remote Switch Unit

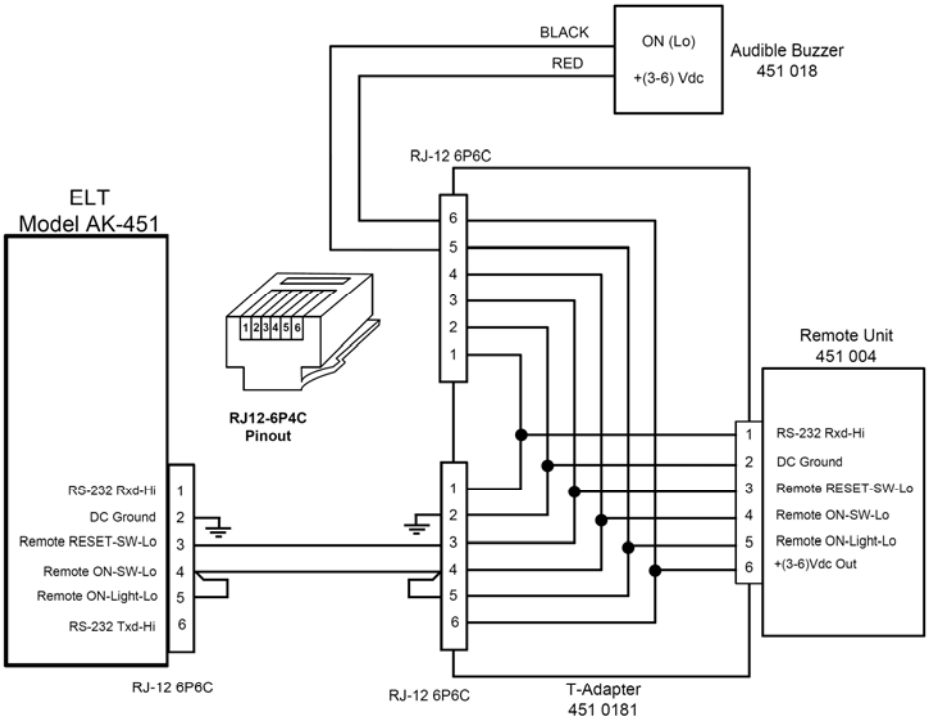

NOTE: Optional Mil Spec M22759/18 or /35 (24AWG) at specified length is available.

Figure 14.1b: Wiring Diagram for AK-451 with 2-wire interconnecting ELT Main Unit and Remote Switch Unit

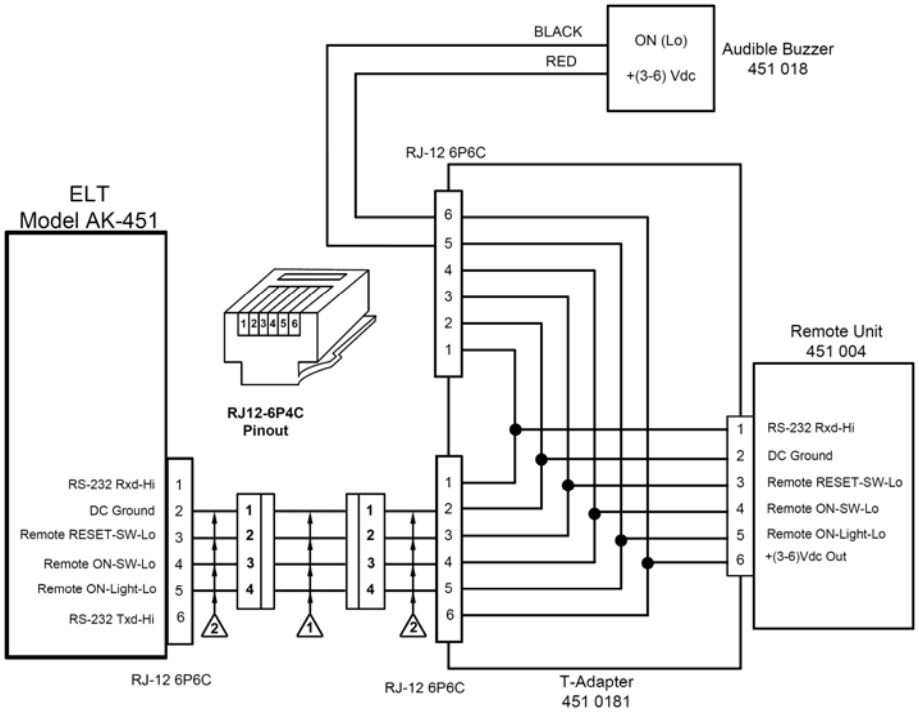

Existing Aircraft 4-wire or 5-wire ELT Systems, Artex, Pointer, etc.

6 in Wiring Adapter with RJ12-6P6C Plug and Molex/Amp Connector (4-pin)

NOTE: Optional Mil Spec M22759/18 or /35 (24AWG) at specified length is available.

Figure 14.1c: Wiring Diagram for retrofitting AK-451 with 4-wire+ interconnecting ELT Main Unit and Remote Switch Unit, Artex, Pointer, Kannad, ACK Tech…

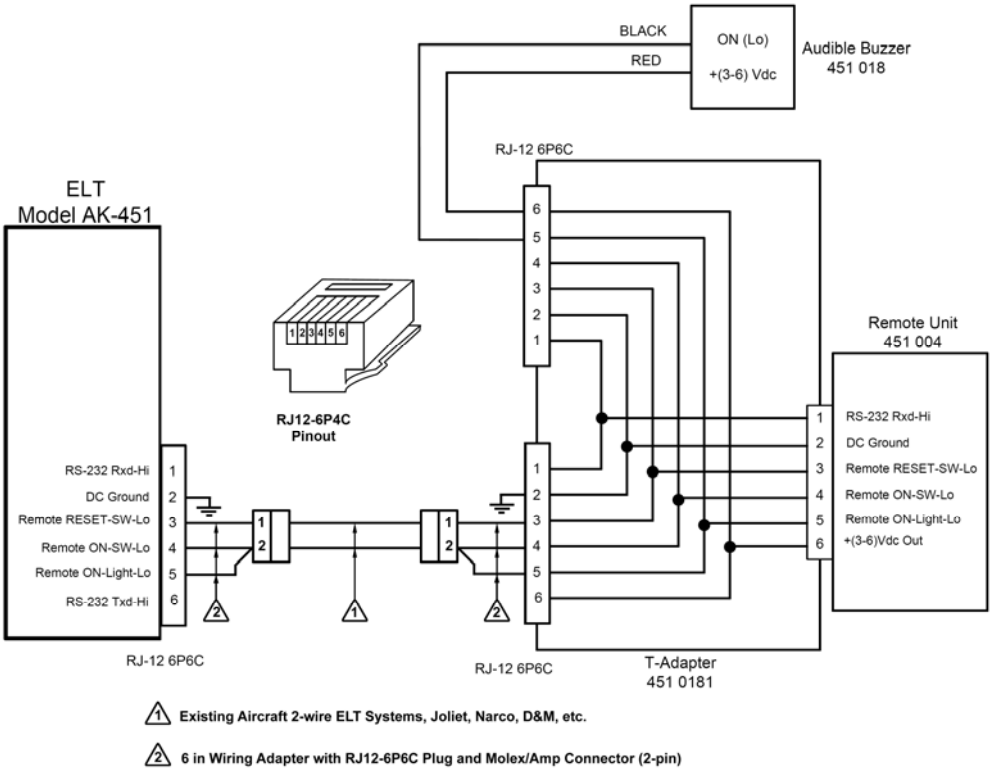

Figure 14.1d: Wiring Diagram for retrofitting AK-451 with 2-wire interconnecting ELT Main Unit and Remote Switch Unit, D&M, Narco, Joliet…

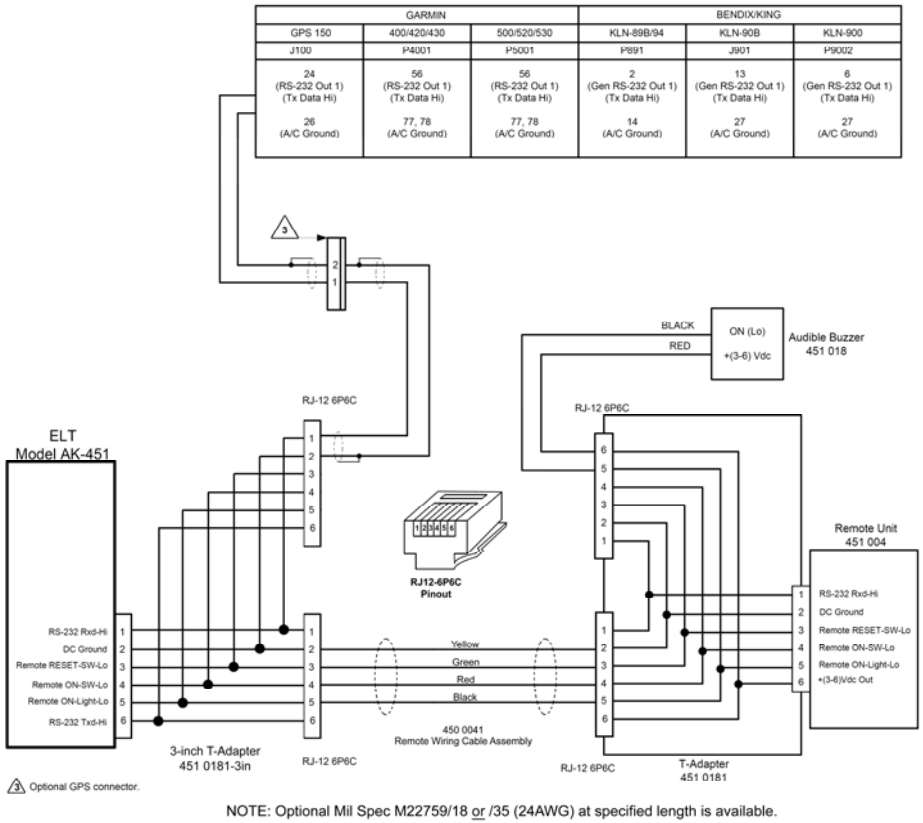

Figure 14.2a: Wiring Diagram for AK-451 with GPS Position and 3-inch T adapter with 4-wire interconnecting ELT Main Unit and Remote Switch Unit

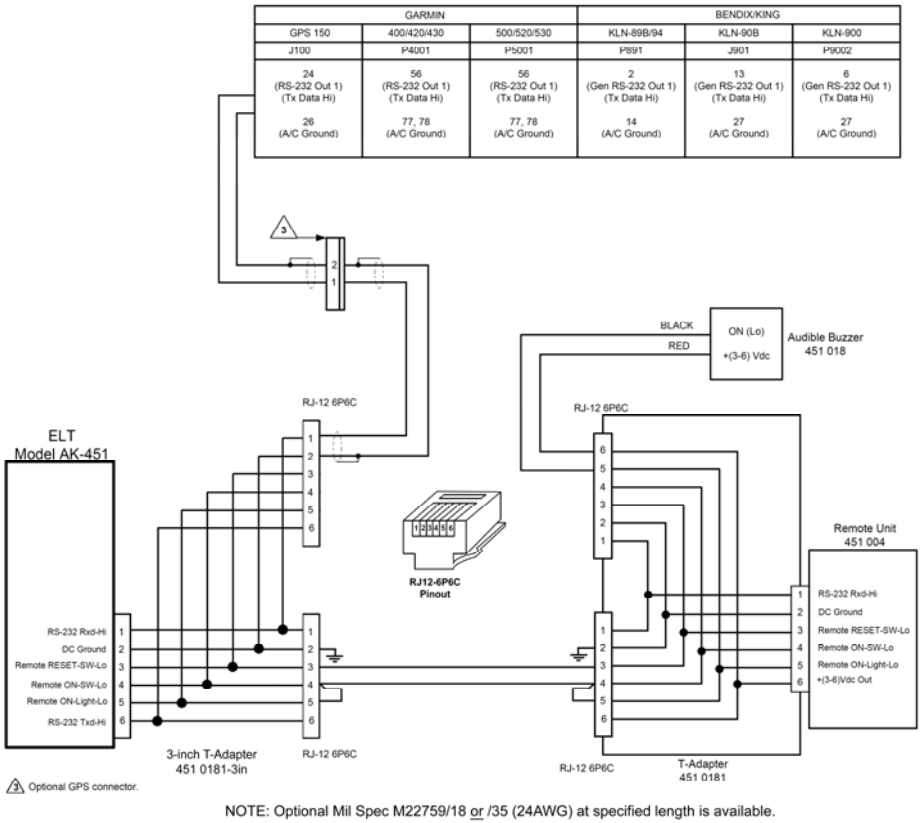

Figure 14.2b: Wiring Diagram for AK-451 with GPS Position and 3-inch T adapter with 2-wire interconnecting ELT Main Unit and Remote Switch Unit

2.5 BATTERY INSTALLATION AND REPLACEMENT

2.5.1 ELT MAIN UNIT BATTERY INSTALLATION AND REPLACEMENT

All batteries are strongly advised to be serviced by Ameri-King or its authorized service centers. End users may return the entire ELT for replacing the batteries and post functional tests.

The Ameri-King Corp. Model AK-451 ELT is designed to use only with Ameri-King lithium battery packages which have been tested per TSO-C126, TSO-C91a requirements.

The use of any other battery will void all warranties of the ELT by Ameri-King Corp. The ELT does not meet the requirements of TSO-C126, and TSO-C91a or FAR 91.207 if used with any other type of battery. Using any other battery is not allowed (forbidden).

The Ameri-King Battery Pack has a 10 years shelf life and 5 years useful life. It will last for 78 hours at -20 deg C, at end of 5 years battery life.
FAR 91.207(c)(1) requires that ELT batteries be replaced when the transmitter has been in use for more than one cumulative hour.

The label sticker for expiration date of the batteries must be affixed on the outside of the ELT battery case and recorded in the aircraft logs.

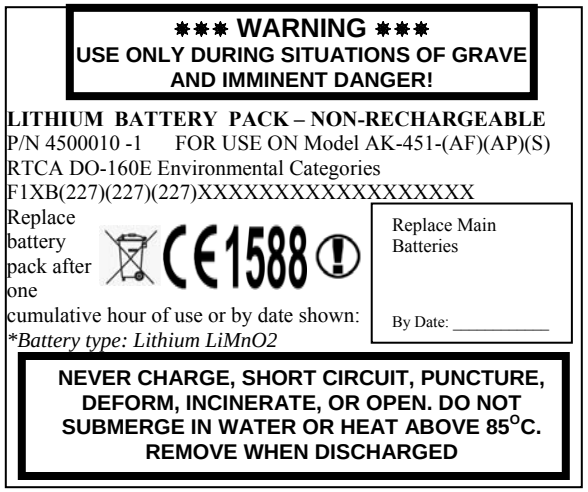

Battery Box Silkscreen

The owner or operator may perform Battery replacement provided that the accessibility, removal and reinstallation of the ELT can be considered "simple" as prescribed in Advisory Circular 91-44A, Paragraph 8.a (See Appendix B).

The following is a step-by-step instruction for replacing ELT Battery Pack P/N 4500010-( ) Series:

1. Using the 3/32" Hex Driver supplied with the ELT, remove the 4 retaining screws and split lock washers that attach the battery case to the ELT Transmitter Assembly (See Figure 15).
2. Insure both battery connectors are locked-in properly by its tab.
   Verify the battery pack voltage is 13 +/- 0.5 VDC
   Ensure that the O-Ring seal and the gasket are in place (See Figure 16).
3. Place the Transmitter Assembly face down on a bench. Press down on the battery case to compress the battery contact springs. Replace the four battery retaining screws and lock washers and evenly tighten until the battery case is pulled flat against the Transmitter Assembly.
4. Remove any existing battery replacement date labels from the battery case and install the new label you prepared in step 3 above in a readily visible location on the ELT.
5. After battery replacement, a transmitter function test must be performed as described in section 3.3 of this manual.

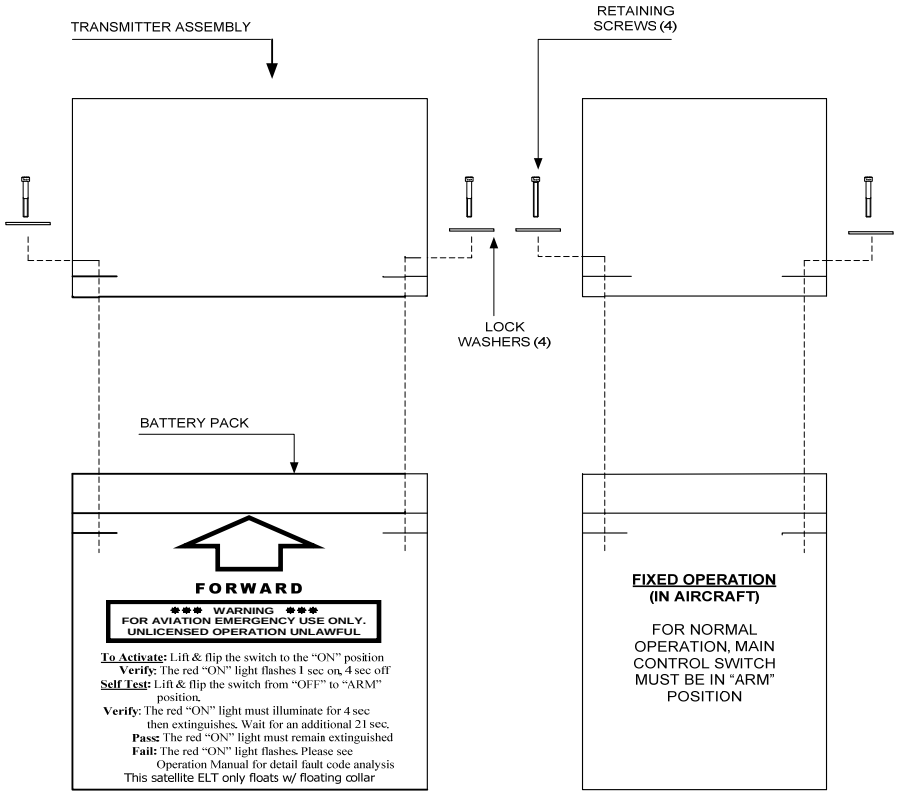

Figure 15: Battery Replacement for ELT Main Unit

Figure 16: Battery Pack Replacement for ELT Main Unit (Actual View)

Figure 16.1: Battery Cell Replacement for ELT Main Unit (Actual View)

2.5.2 ELT REMOTE UNIT BATTERY INSTALLATION AND REPLACEMENT INSTRUCTIONS

The ELT Remote Unit is designed to be powered by a Duracell DL1/3NB 3 Volt Lithium Batteries. Under normal operating conditions, the Lithium battery must be replaced every five years. If the ELT is activated for an unknown period of time, the lithium battery must be replaced.

To install or replace the Remote Unit Battery, follow these steps:

Remove the three Retaining Screws that secure the top and bottom half of the remote unit (Figure 17). Loosen the two Switch Retaining nuts located on the front of the unit (Figure 17).

Carefully remove the top half of the Remote unit, exposing the battery compartment (Figure 17). If replacing an old battery, carefully inspect the battery contacts for dirt or corrosion. IF the contacts need cleaning, use only non-abrasive electrical contact cleaner and a stiff brush. Badly corroded contacts should be replaced.

Insert the battery with the polarity as shown in Figure 17. The polarity is also engraved on the bottom of the battery compartment.

Replace the top half of the remote unit and replace the three retaining screws and tighten the two switch retaining nuts.

The next remote battery replacement date should be recorded on one of the adhesive labels supplied and affixed to the ELT in a readily visible location.

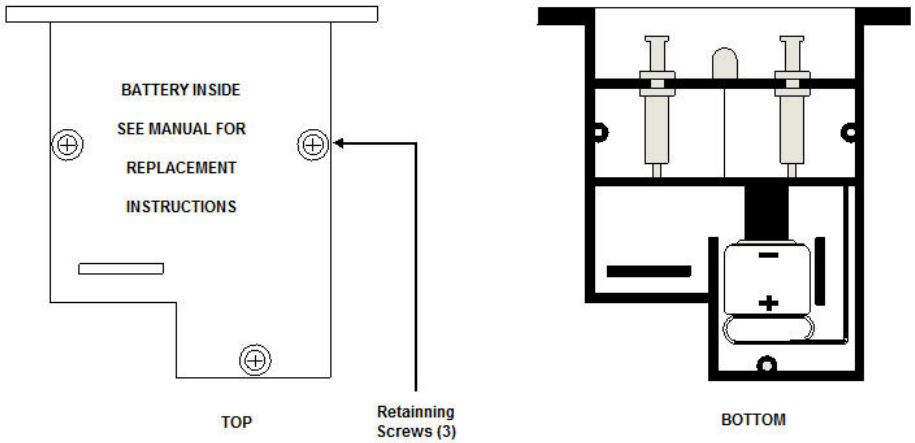

Figure 17: Battery Replacement for ELT Remote Unit.

2.6 FAA Form 337

For most installations an FAA Form 337 will be required for FAA registration. Additional information regarding the completion of FAA Form 337 can be found in Advisory Circular AC 43.9-1F (Instructions for Completion of FAA Form 337). AC 43-210 (Standardized Procedures for Requesting Field Approval of Data, Major Alterations and Repairs) provides further guidance. This manual constitutes FAA approved data as described in AC 43.9-1F, paragraph (h)(2) and AC 43-210, chapter 2, paragraph 201(a)(6) for major alterations. Not all installations are "major;" consult your local FAA ACO for clarification.

Data used as a basis for approving major repairs or alterations for return to service must be FAA-approved prior to its use for that purpose and includes: FAR (e.g., airworthiness directives), ACs (e.g., AC 43.13-2B under certain circumstances), TSOs, parts manufacturing approval (PMA), FAA-approved manufacturer's instructions, kits and service handbooks, type certificate data sheets and aircraft specifications. Other forms of approved data would be those approved by a designated engineering representative (DER), a manufacturer holding a delegation option authorization (DOA), STCs and, with certain limitations, previous FAA field approvals.

Supporting data such as stress analyses, test reports, sketches, or photographs should be submitted with the FAA Form 337. The Ameri-King IM-451 Installation Manual may be used as a supporting data.

These supporting data will be returned to the applicant by the local FAA district office since only FAA Form 337 is retained as a part of the aircraft records at Oklahoma City.

SECTION III
OPERATION

3.1 GENERAL

This section describes the operation of the ELT, Emergency Locator Transmitter, mo tdel AK-451.

The following types are applicable for the model AK-451:

a. Automatic Fixed - Fixed ELT (AF):

See paragraph 1.2.1 (a)

b. Automatic Portable - ELT (AF) (AP) with dual antennas:

See paragraph 1.2.1 (b)

c. Automatic Portable - ELT (AP):

See paragraph 1.2.1 (c)

d. Survival-ELT (S):

See paragraph 1.2.1 (d)

The AK-451 is a "third generation ELT," transmitting on 406.028, 121.5 and 243.0 MHz. The ELT is designed to meet or exceed the requirements of TSO-C126 and TSO-C91a and the mandatory automatic ELT requirements of FAR Part 91. The ELT meets the requirements of DOT Aviation Regulations, Section 3, Chapter 3, Part 2.

The ELT automatically activates during a crash and transmits the standard swept tone.

The Green ON lights flashing located on both the ELT Main Unit and the Cockpit Remote Switch unit and the buzzer sound periodically indicates when the ELT is activated. The ON switch on the Remote Switch Unit allows you to turn on the ELT for testing. The RESET Switch on the Remote Switch Unit enables to reset the ELT. In normal operation, the Main Switch on the ELT Unit must be selected at "ARM" position.

Note:
You cannot "disarm" or disable the unit from the cockpit; you can only deactivate the ELT after it has been activated.

The ELT unit is able to withstand extremely harsh environments. Units exactly like yours have been subjected to numerous 500G shock pulses; 1000 pounds crash weights and severe penetrator tests, and continue to operate normally. Continued operation in a temperature range of -20 to +55 degrees Celsius is assured.

3.2 OPERATION

The AK-451 ELT, Emergency Locator Transmitter, is a state of the art Micro controller technology, long lasting, solid state based equipment. It is an extremely reliable, highest standard of quality, designed to meet TSO-C126 and TSO-C91a requirements for critical application.

Both ELT main unit and Remote Switch are self-powered by their own internal batteries. Interface with aircraft electrical power system is not required.

With the main switch, located on the ELT main unit, set at "ARM" position, the AK-451 ELT is automatically activated upon sensing a change of velocity of 4.5 ± 0.5 Feet/Second, along its longitudinal axis (Automatic Fixed-ELT (AF) Configuration). It is also designed to be removed from the aircraft and used as a personal locating device when it is necessary to leave the scene of the accident (Automatic Portable ELT (AP) Configuration) and survival ELT(s) configuration.

In the event of a crash, the AK-451 activates automatically, and transmits the standard swept tone on 243/121.5 MHz lasting until battery power is gone. This 243/121.5 MHz signal is mainly used to pinpoint the beacon during search and rescue operations.

For the first 24 hours of operations, a 406 MHz signal is transmitted at 50-second intervals. This transmission lasts 520 ms and contains identification data programmed into the beacon and is received by COSPAS-SARSAT satellites. The aircraft GPS/NAV latitude/longitude data position will also be transmitted (if GPS/NAV is connected with the ELT). The transmitted data is referenced in a database (maintained by the national authority responsible for ELT registration) and used to identify the beacon and owner.

Accuracy:

Doppler positioning is employed using both 121.5 MHz and 406 MHz signals. Position accuracy of the 121.5 MHz signal is within an area of approximately 15-20 km radius about the transmitter. Due to the better signal integrity of the 406 MHz, its location accuracy is within about a 1-2 km radius. If the GPS/NAV position data is transmitted, the accuracy of the AK-451 will narrow to 22 meters (typically).

3.3 TRANSMITTER FUNTIONAL TEST

The ELT should be tested every month.

WARNING

Do not allow test duration to exceed 5 seconds. A false alarm may be generated. Any time the ELT is activated, it is transmitting a 121.5 MHz and 243.0 MHz distress signal. If the ELT operates for approximately 50 seconds, a "live" 406 MHz distress signal is transmitted and is considered valid by the Cospas-Sarsat satellite system.
Any time that the ELT Main Switch is lifted and flipped from "OFF" to "ARM", a 406 MHz self test signal is transmitted (after 25 seconds), however it is specially coded as a "self test" signal that is ignored by the COSPAS-SARSAT satellites.
Note: Press **RESET** anytime to turn off unwanted transmission.

3.3.0 QUICK OPERATION CHECK

Note: Refer to Appendix A.1 for Quick Operation Check in sequence order.

3.3.0.1 **ELT Main Switch @ ON position:** ELT swept Tone must be heard on the VHF Radio @121.5 MHz. The 2 LED lights flashing (4 sec OFF, 1 sec ON), synchronized with the Buzzer sound (4 sec OFF, 1 sec ON).

3.3.0.2 **ELT Main Switch @ ARM position:** Both LED Lights and Buzzer must illuminate and sound for 4 sec, then extinguish.
This is to make sure LED and Buzzer are properly powered.
Note: Press **RESET** anytime to turn off unwanted transmission.

The ELT will then automatically enter Self test mode. Self test takes 25 sec.
If ELT Self test is passed, No light illuminate, no buzzer sound.
If ELT malfunctions, the LED Lights and buzzer will show 1 flash, 2 flashes, 3 flashes, or 4 flashes etc. Refer to Operation Manual of trouble shooting error flashes meaning.

Next, in order to check G Switch, Throw the ELT forward and backward, 2-3 times, the ELT must activate, ELT swept Tone must be heard on the VHF Radio @121.5 MHz. The 2 LED lights flashing (4 sec OFF, 1 sec ON), synchronized with the Buzzer sound (4 sec OFF, 1 sec ON).

Next, Press either RESET Button, no ELT swept tone heard on the 121.5 MHz VHF radio. Both LED Lights and Buzzer must be extinguished.

Next, Press the ON Switch on the Remote Switch Unit, ELT swept Tone must be heard on the VHF Radio @121.5 MHz. The 2 LED lights flashing (4 sec OFF, 1 sec ON), synchronized with the Buzzer sound (4 sec OFF, 1 sec ON).

3.3.0.3 For normal operation, leave the ELT Main Switch @ ARM position at all times.

No ELT swept tone heard on the 121.5 MHz VHF radio. No LED light illuminates. No buzzer sound.

Detailed Operation Check:

3.3.1 Main Switch ON/OFF/ARM Operation:

In normal operation, the Main Switch, located on the ELT main unit, must be in the "ARM" position. In the event of a crash, an acceleration activated crash censor (G-switch) turns the ELT 'on' automatically when the ELT experiences a change in velocity (or deceleration) of 4.5 fps ± 0.5 fps. Activation is also accomplished by means of the cockpit mounted remote control unit or the "ON" switch on the ELT main unit. To reset the ELT press either "RESET" switch on the remote control panel or on the main unit.

The ELT has an "OFF" position. This allows the beacon to be handled or shipped without 'nuisance' activation. Care should be taken when transporting or shipping the ELT not to move the switch or to allow packing material to become lodged such as to toggle the switch.

Main switch, alternate positions:

- "**ON**:" ELT transmits immediately. Both Green ON lights on the main unit and remote switch unit flash and the buzzer sound, at rate of 1 second ON, 4 seconds OFF. The ELT swept Tone must be heard on the 121.5 MHz VHF Radio.

- "**OFF**:" The ELT is turned off.

- "**ARM**:" ELT self-test is confirmed after 24 seconds. If the self-test is passed, the 2 Green ON lights and the buzzer sound must be extinguished. The ELT swept Tone must be silent on the 121.5 MHz VHF Radio.

- The ELT system is then in the "ARM" mode.

3.3.2 Transmitter ID Programming and Self-Test:

Turn the main switch from the "OFF" position to the "ARM" position. The Buzzer sound and the 2 Green ON lights shall illuminate for 4 seconds, then extinguish. This is to allow coding programming during the next 20 seconds window and self-test for 1 second thereafter.

Note: The ELT may be ID coding programming during the aforementioned 20 seconds window period. If no programming happened the ELT will then enter the Self Test Mode for 1 second thereafter.

Self Test takes 25 sec. Self-test results (after 25 seconds) are:

If the self-test is "Passed": the Green ON light is steadily extinguished, and there's no buzzer sound. ELT swept Tone must be silent on the 121.5 MHz VHF Radio.

If the self-test is "Failed": the Green ON light flashes as defined below:

1 flash: Internal Data stored in Memory at fault.
2 flashes: Distress ID stored in Memory at fault.
3 flashes: Battery voltage is low < Useful Life Battery Voltage setting.
4 flashes: Vcc supplies for F3, F2, or F1 at fault.
5 flashes: F3 RF power level < 33 dBm @ 406.028 MHz
7 flashes: F1/F2 VHF RF power level < 17 dBm @ 121.5/243 MHz.
9 flashes: PLL locked in F3 or F1 or F2 at fault.
Continuous flash: no F3/F2/F1 RF output power, ELT shuts down completely

Note:

The self-test mode that transmits a 406 MHz test code pulse monitors certain system functions before returning to the ARM mode. The 406 MHz test pulse is ignored by any satellite that receives the signal, but the ELT uses this output to check output power and correct frequency.

- Self-test is 520 ms long message burst on the 406 MHz signal. Synchronization pattern is 011 010 000.
- Self-test is then 121/243 MHz (VHF) Continuous Wave during 1s.
- During Self Test, ELT swept Tone must be silent on the 121.5 MHz VHF Radio.
- If No Antenna or No coaxial cable connected, the ELT may or may not 5 flashes.

3.3.3 System Integration Test:

The test consists of turning the unit "ON" and then "resetting" it to verify that the Transmitter, Latch Circuit, Batteries, and associated equipment are operating properly. Regulations require that Transmitter tests only be done during the first 5 minutes of each hour and must not last for more than 3 Audio sweeps (1.5 seconds). If you are at a location where there is an FAA Control Tower or other monitoring facility, notify the facility before beginning the tests. **Never activate the ELT while airborne for any reason.** See Figure 18 for the ELT Front Panels for both ELT Main Unit and Remote Unit.

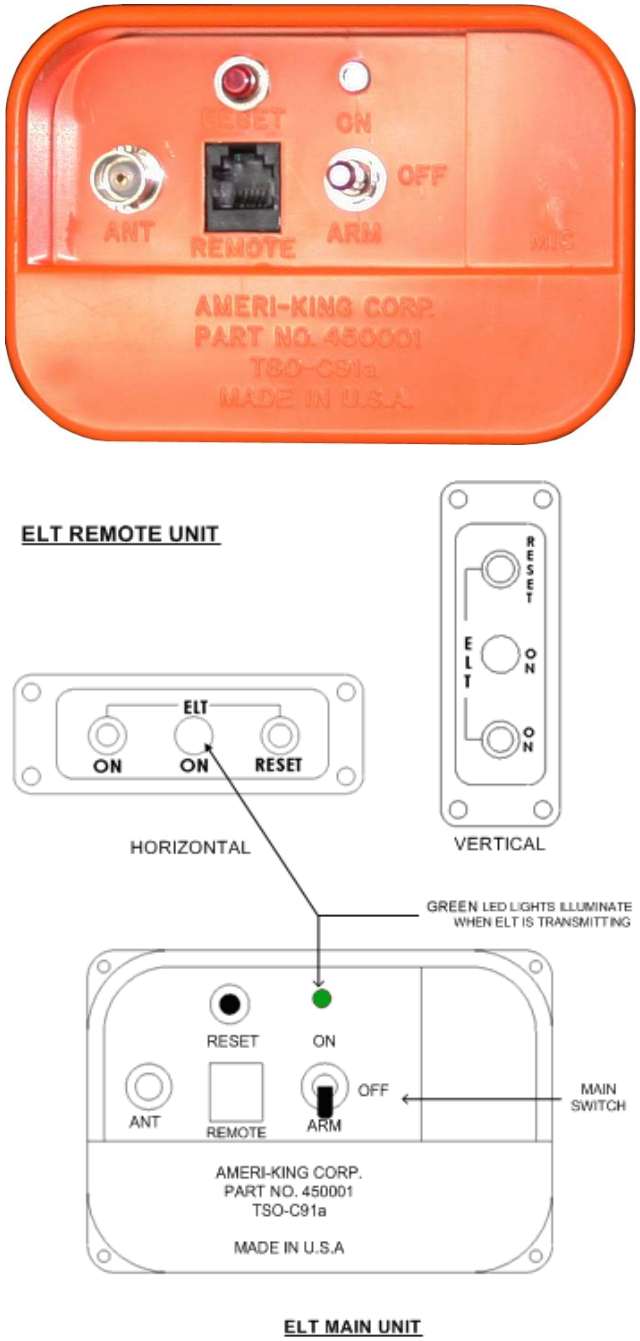

Figure 18: ELT Front Panels-Main Unit and Remote Unit.

3.3.3.1 Monitor 121.5 MHz using the Aircraft Com Receiver or Portable Hand Held Receiver. Turn the Squelch all the way up or ON.

3.3.3.2 Ensure that the main switch on the ELT is on "ARM" position.

- Push the "ON" button on the Cockpit Remote Switch Unit. Verify that both the Green ON lights, located on the Main Unit and the Cockpit Remote Switch Unit, are flashing. Verify the Buzzer sound periodically. Verify the ELT audio sweep tone can be heard on the Com Receiver.

- Push the RESET button on the Remote Switch unit. Verify that the two Green ON lights are extinguished. Verify the Buzzer sound ceased. Verify the ELT audio sweep tone ceased.

G Switch Check: Activate the G switch by using a rapid forward (throwing) motion coupled by a rapid reversing action. Verify that the ELT has been activated by use of the Wattmeter, the Airplane's VHF Radio Communications Receiver when tuned to 121.5 MHz, or other means (see Note 1). The ELT must then be reset by pressing either the RESET push button located on the ELT main unit or the ELT Remote Unit.

Note 1:
This is not a measured check. It only indicates that the G-Switch is working.

Note:
In normal configuration, the main switch on the ELT Main Unit must be selected to the "ARM" position. Whenever both the Green ON lights (located on the Main Unit and the Remote Switch Unit) flash and the Buzzer sound periodically, they indicate the ELT is transmitting.

If the ELT be accidentally activated by turbulence, hard landing, etc., or if this occur under any conditions other than an accident requiring immediate assistance, pressing the RESET button on the Remote Switch Unit.

If the Aircraft is on the ground and the RESET button on the Remote Unit does not cause the Green ON light to extinguish, the RESET button on the Main Unit should be pressed. If airborne and the RESET button on the Remote unit does not cause the Green ON LIGHT to extinguish, the main switch on the ELT should be set to the OFF position, if the ELT is accessible.

If the ELT is not accessible in flight, you should land at the nearest suitable airport and set the Main Switch to the OFF position. In either case, the unit should be inspected by qualified facility as soon as possible.

The Aircraft may be operated with the ELT removed for inspection or repair subject to the conditions of FAR 91.207.

In the event of an accident, ensure that the External Aircraft Antenna has no damage.

Important:
If the ELT is accessible after the accident, place the Main Switch in the ON position and monitor it on 121.5 MHz for proper operation if possible. If the Antenna is broken off of the Aircraft, the ELT Unit should be removed and the portable antenna to be used. If the ELT Unit is to remain at the Aircraft site, it should be placed on a large metallic portion of the airframe with its Antenna pointing skyward. The Green ON lights should be flashing after the accident.

If the ELT is to be taken along as the Portable Unit when leaving the scene of the accident, place the Main switch in the ON position and keep the Antenna vertically oriented as much as possible. The ELT Green ON light should be flashing.

3.3.4 Green ON lights, Buzzer sound, and Antenna check:

3.3.4.1 Green ON Lights and Buzzer Sound Functions:

Green ON lights, located on the ELT main unit and remote switch unit:

- In **ON** mode: Green ON LED flashes continuously (1 second ON, 4 second OFF) and the Buzzer sound periodically. The ELT swept Tone must be heard on the 121.5 MHz VHF Radio. This is to indicate that the ELT has been manually activated.

- In **ARM** mode: Green ON light flashes continuously (1 second ON, 4 second OFF) and the Buzzer sound periodically. ELT swept Tone is heard on the 121.5 MHz VHF Radio. This is to indicate that the ELT has been auto activated by the G switch.

3.3.4.2 Antenna Check: A low quality AM Broadcast Radio Receiver or Equivalent Test Equipment should be used to determine if energy is being transmitted from the Antenna. When the Antenna of this Radio (tuning dial on any setting) is held about 6 inches from the activated ELT Antenna, the ELT Aural tone will be heard (see note below). The ELT must be reset by pressing either the RESET push button located on the ELT Main unit or the ELT Remote Unit.

Note: This is not a measured check, but it does provide confidence that the Antenna is radiating with sufficient power to aid search and rescue. The Aircraft's VHF Receiver, tuned to 121.5 MHz, may also be used. This Receiver however is more sensitive and could pick up a weak signal even if the radiating ELT's Antenna is disconnected. Thus, it does not check the integrity of the ELT System or provide the same level of confidence as does an AM Radio.

3.3.5 TRANSMITTER FUNTIONAL TEST FOR ELT-(S) ONLY

The ELT-(S) should be tested every month.

3.3.5.1 Main Switch ON / OFF / SELF TEST Operation:

The ELT-(S) has an "OFF" position. This allows the beacon to be handled or shipped without 'nuisance' activation. Care should be taken when transporting or shipping the ELT-(S) not to move the switch or to allow packing material to become lodged such as to toggle the switch.
Main Switch, alternate / alternate / momentary positions:

- "**ON**:" Alternate position. ELT-(S) transmits immediately. Green ON light on the main unit flashes, 1 second ON, 4 seconds OFF. The ELT swept Tone must be heard on the 121.5 MHz VHF Radio.

- "**OFF**:" Alternate position. The ELT-(S) is turned off.

- "**SELF TEST**:" Momentary position. ELT-(S) self-test is confirmed after the switch is held for 25 seconds. If the self-test is passed, the Green ON light must be extinguished. ELT swept Tone must be silent on the 121.5 MHz VHF Radio.

The ELT-(S) system is fully self-tested.

3.3.5.2 Transmitter Self-Test:

Turn and hold the main switch, from the "OFF" position to the "SELF TEST" position. The Green ON light shall illuminate for 4 seconds then extinguish. This is to allow coding programming during next 20 seconds window and self-test for 1 second thereafter.
The ELT-(S) may be coding programming during the aforementioned 20 seconds window period. If no programming happened the ELT will then enter the Self Test Mode for 1 second thereafter.

Self-test results after (4+20+1) =25 seconds, is:
If the self-test is passed, the Green ON LIGHT is steadily extinguished. ELT swept Tone must be silent on the 121.5 MHz VHF Radio.

If the self-test is failed, the Green ON LIGHT flashes as shown below:

1 flash: Internal Data stored in Memory at fault.
2 flashes: Distress ID stored in Memory at fault.
3 flashes: Battery voltage is low < Useful Life Battery Voltage setting.
4 flashes: Vcc supplies for F3, F2, or F1 at fault.
5 flashes: F3 RF power level < 33 dBm @ 406.028 MHz
7 flashes: F1/F2 VHF RF power level < 17 dBm @ 121.5/243 MHz.
9 flashes: PLL locked in F3 or F1 or F2 at fault.
Continuous flash: no F3/F2/F1 RF output power, ELT shuts down completely.

Note:
The self-test mode that transmits a 406 MHz test code pulse monitors certain system functions before returning to the SELF TEST mode. The 406 MHz test pulse is ignored by any satellite that receives the signal, but the ELT-(S) uses this output to check output power and correct frequency.

- Self-test is 520 ms long message burst on the 406 MHz signal. Synchronization pattern is 011 010 000.
- Self-test is then 121/243 MHz (VHF) Continuous Wave during 1s.
- During Self Test, the ELT swept Tone is silent on the 121.5 MHz VHF Radio.

The ELT-(S) may accept GPS position input by connecting the external GPS to the Remote connector

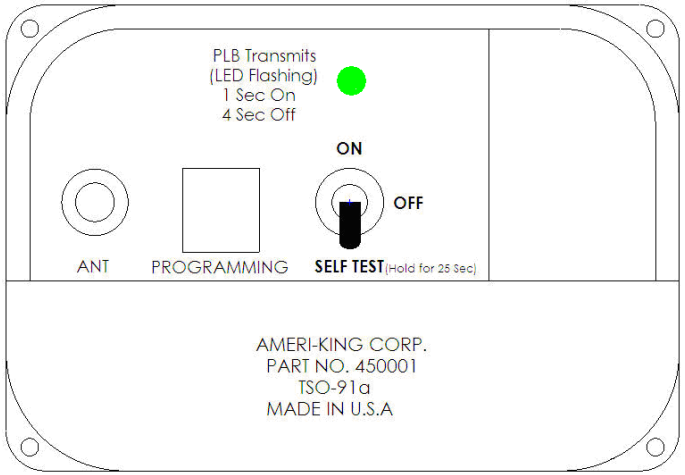

ELT-(S) Top Label

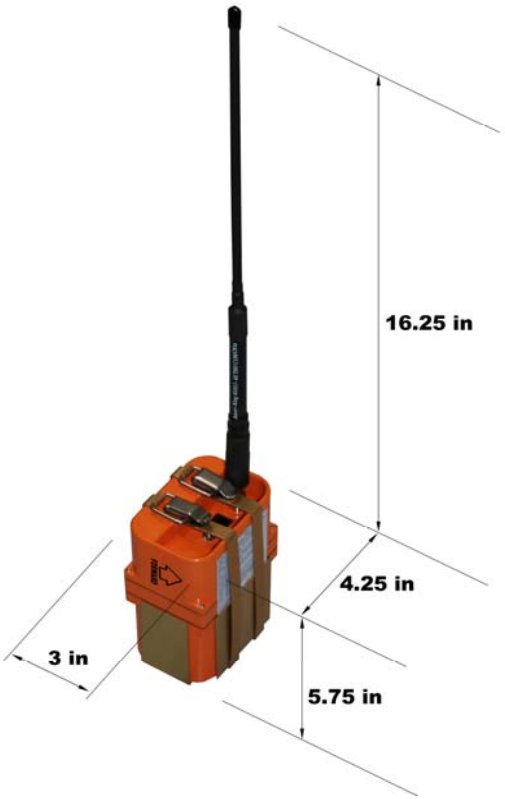

Figure 19: Automatic Portable-ELT (AP) with integral antenna Survival-ELT (S)

FORWARD

✱✱✱ WARNING ✱✱✱
FOR AVIATION EMERGENCY USE ONLY.
UNLICENSED OPERATION UNLAWFUL

To Activate: Lift & flip the switch to the "ON" position
Verify: ELT swept tone heard on 121.5 MHz VHF Radio
Green "ON" LED is on after 4 sec for 1 sec, then off 4 sec
Self Test: Lift & flip the switch to "ARM" position
Verify: Green "ON" LED is on for 4 sec, then off
Wait for an additional 21 sec
If Pass: Green "ON" LED stays off. No swept tone on 121.5 Radio
If Fail: Green "ON" LED flashes. See Operation Manual for details
Check G switch: Next, If pass Self Test, shake ELT back and forth rapidly in direction of FORWARD arrow.
ELT must activate, and swept tone heard on 121.5 Radio.
THIS SATELLITE ELT ONLY FLOATS W/ FLOATING COLLAR

Front label for AK-451-(AF)(AP) with dual antennas and (S)

✱✱✱ WARNING ✱✱✱
USE ONLY DURING SITUATIONS OF GRAVE AND IMMINENT DANGER!

LITHIUM BATTERY PACK – NON-RECHARGEABLE
P/N 4500010 -1 FOR USE ON Model AK-451-(AF)(AP)(S)
RTCA DO-160E Environmental Categories
F1XB(227)(227)(227)XXXXXXXXXXXXXXXXXX
Replace battery pack after one culmulative hour of use or by date shown:
**Battery type: Lithium LiMnO2*

CE1588

Replace Main Batteries

By Date: _____

NEVER CHARGE, SHORT CIRCUIT, PUNCTURE, DEFORM, INCINERATE, OR OPEN. DO NOT SUBMERGE IN WATER OR HEAT ABOVE 85°C. REMOVE WHEN DISCHARGED

Back label

✱✱✱ WARNING ✱✱✱
FOR AVIATION EMERGENCY USE ONLY.
UNLICENSED OPERATION UNLAWFUL

To Activate: Lift & flip the switch to the "ON" position
Verify: ELT swept tone heard on 121.5 MHz VHF Radio
Green "ON" LED is on after 4 sec for 1 sec, then off 4 sec
Self Test: Lift & flip the switch to "ARM" position
Verify: Green "ON" LED is on for 4 sec, then off
Wait for an additional 21 sec
If Pass: Green "ON" LED stays off. No swept tone on 121.5 Radio
If Fail: Green "ON" LED flashes. See Operation Manual for details
Check G switch: Next, If pass Self Test, shake ELT back and forth rapidly in direction of FORWARD arrow.
ELT must activate, and swept tone heard on 121.5 Radio.
THIS SATELLITE ELT ONLY FLOATS W/ FLOATING COLLAR

Front label for AK-451-(AP) with integral antenna

FORWARD

FIXED OPERATION
(IN AIRCRAFT)

FOR NORMAL OPERATION, MAIN CONTROL SWITCH MUST BE IN "ARM" POSITION

Side label for AK-451-(AP) with integral antenna

3.4 PERIODIC MAINTENANCE (INSTRUCTIONS FOR CONTINUED AIRWORTHINESS):

REFERENCES: FAR Part 91.207, Part 43 Appendix D (i).
FAR Part 91.207 Paragraph (d)
FAR Part 91.407

Refer to Appendix B for Maintenance Check List with Compliance Cross References.

PURPOSE:
To insure continued reliability of your ELT, it must be inspected for damage and wear which could be caused by age, exposed elements, vibrations, etc. Even the best designed equipment, if not properly maintained and cared for, will eventually fail.

IMPORTANT NOTES:
The following inspections must be performed, **a minimum of one time every year:**

3.4.1 Secure Inspection: Inspect the ELT Main Unit and Mounting Tray to insure all fasteners and mechanical assemblies are secure.

3.4.2 Corrosion Inspection for Coaxial Cable: Inspect the Coaxial Cable connecting the ELT Main Unit to the Antenna for cuts or abrasions on its outer jacket. Disconnect the BNC connectors on each end. Examine both the BNC connectors and the mating plug on the Antenna and the ELT Main Unit for any signs of corrosion.

3.4.3 Corrosion Inspection for Remote Wiring Modular Cable: Inspect the Remote Wiring Modular Cable, connecting the ELT Main Unit to the Remote Unit of signs of wear or abrasion on its outer jacket. Remove the Modular Connecting Cable and inspect and jack and plug assembly for corrosion.

3.4.4 Expiration Date Check: Check the expiration date of the ELT Main Unit and the Remote Unit Batteries. Replace if necessary.

3.4.5 Battery Leakage Check: Remove the Battery Case and inspect the Battery Compartment for signs of corrosion or battery leakage. If any battery leakage is present, all batteries must be replaced. **The Battery useful life is 5 years.**

3.4.6 Operational Test: After completing the above inspections, a Functional Test as described in Paragraph 3.3 must be performed to verify proper operation.

3.4.7.1 G-Switch Check: Ensure that the Main Switch on the ELT main unit must be selected at "ARM: position at all times. Activate the ELT using applied force. The direction for mounting and force activation is indicated on the ELT. The AK-451-(AF)(AP) ELT can be activated by using a rapid forward (throwing) motion coupled by a rapid reversing action. Verify that the ELT has been activated by use of the Wattmeter, the Airplane's VHF Radio Communications Receiver when tuned to 121.5 MHz, or other means (see Note 1). The ELT must then be reset by pressing either the RESET push button located on the ELT main unit or the ELT Remote Unit.

Note 1:
This is not a measured check. It only indicates that the G-Switch is working.

3.4.7.2 Antenna Check: A low quality AM Broadcast Radio Receiver or Equivalent Test Equipment should be used to determine if energy is being transmitted from the Antenna. When the Antenna of this Radio (tuning dial on any setting) is held about 6 inches from the activated ELT Antenna, the ELT Aural tone will be heard (see notes 2 and 3). The ELT must be reset by pressing either the RESET push button located on the ELT Main unit or the ELT Remote Unit.

Note 2:
This is not a measured check, but it does provide confidence that the Antenna is radiating with sufficient power to aid search and rescue. The Aircraft's VHF Receiver, tuned to 121.5 MHz, may also be used. This Receiver however is more sensitive and could pick up a weak signal even if the radiating ELT's Antenna is disconnected. Thus, it does not check the integrity of the ELT System or provide the same level of confidence as does an AM Radio.

Note 3:
Because the ELT radiates on the emergency frequency, the Federal Communications Commission allows these tests to be conducted only within the first 5 minutes after any hour and limits the tests to 3 sweeps of the Transmitter Audio Modulation.

IMPORTANT NOTE:
IN NORMAL CONFIGURATION, THE MAIN SWITCH, LOCATED ON THE ELT MAIN UNIT, MUST BE SELECTED AT "ARM" POSITION AT ALL TIMES.

3.4.8 Verification of Digital Message

Note:
This test is not mandatory per FAR 91.207(d) however Ameri-King strongly recommends that it be performed as part of periodic maintenance, at least every year.

Verify the 406 MHz digital message using a Computer Test Set or equivalent, capable of receiving and decoding the message. Ameri-King suggests the Ameri-King ELT Computer Test Set P/N TS-451. Contact your local Ameri-King dealer for availability of the Computer Test Set or call Ameri-King. Follow instructions provided with the computer test set.

The AMERI-KING AK-451 has a self-test feature, which is encoded such that it will be ignored by the SAR satellite system. This 15-digit number is used to register the ELT with the appropriate 406 MHz ELT registration authority. In the US, the National Oceanic and Atmospheric Administration (NOAA) maintain the database of registered ELT's.

Note:
For the following example, the programming protocol is assumed to be Standard Location Protocol, ELT with C/S type approval number and Serial Number (Long Message.) Other protocols are possible and the exact read-outs of the Computer Test Set will vary. Refer to the applicable operation manual included with the Computer Test Set or contact AMERI-KING for assistance.

To verify the digital message, perform the following steps:

Setup
Use provided cable to connect the ELT (RJ-12 port) to the PC (USB port)

3.4.8.1 ELT ID Reading

Step1: Double-Click AK451 Icon to run the program. The programming window appears as below:

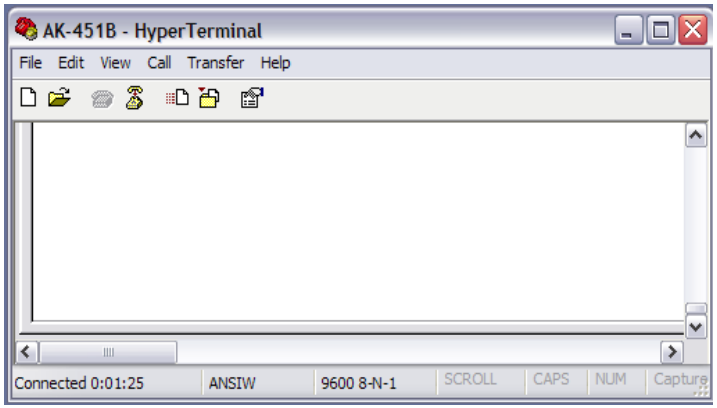

Note: If you don't see the window above, you may try the other USB port.

Step 2: Set the ELT main switch to "**ARM**" position.

Step 3: Verify the LED 'ON' light illuminates for 4 seconds.

Step 4: At the ":>_" prompt, type: "**Password**" command then press "Enter" to go to main menu. Must type this command within next 20 seconds after the command prompt appears.

Note: If there is no programming command input in this time window, the ELT will enter the Self-Test mode, and you cannot program the ELT. In this case, set the ELT switch to "**OFF**" position and start again from step 2.2.

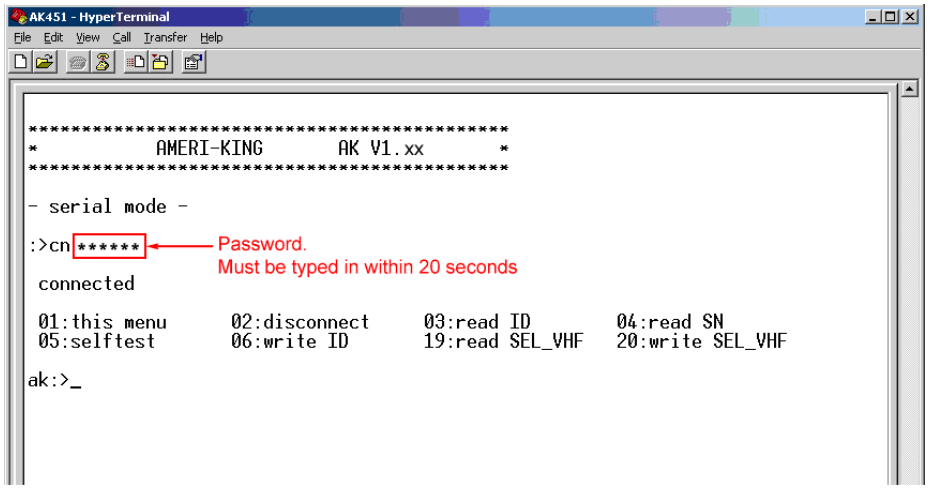

Step 5: To read ELT ID: Use command " **03** "

Step 6: View message, ensure that all applicable information is correct (country code, aircraft ID, etc.).

Step 7: The 15 digit ID hex ID (for example "2E28598228FFBFF") should match what is shown on the ELT product label. This is the 15 digit hex ID (Unique Identification Number or "UIN") that is used to register the ELT.

3.4.9 Verification of Registration

Note:
This verification is not mandatory per FAR 91.207(d) however Ameri-King strongly recommends that it be performed as part of periodic maintenance, at least every year.

Check ELT for signs of registration.
In the US, NOAA supplies a beacon registration label that is applied to the ELT when it is registered. The following address should be used to register and obtain information on how to register 406 MHz ELT's in the United States:

SARSAT BEACON REGISTRATION
E/SP3, RM 3320, FB-4
NOAA/NESDIS
5200 Auth Rd.
Suitland, MD 20746-4304
http://www.sarsat.noaa.gov/

The Ameri-King website also contains information on registering beacons in other countries

http://www.Ameri-King.com

NOTICE: FOR ELTS THAT HAVE A COUNTRY OF REGISTRATION OTHER THAN THE USA, PLEASE CONTACT THE APPROPRIATE CIVIL AVIATION AUTHORITY IN THAT COUNTRY FOR GUIDELINES AND DOCUMENTATION NEEDED TO ASSURE PROPER REGISTRATION

Logbook Entry:
Enter the date the test technician's initials and whether the ELT passed or failed into the aircraft's logbook.

3.4.10 Verification of ELT/GPS interface (if equipped)

Note: This test is not mandatory per FAR 91.207(d); however, Ameri-King strongly recommends that it be performed as part of periodic maintenance, at least every year.

3.4.10.1 ELT to GPS Interface Information

For details on the installation and use of the ELT Computer Test Set TS-451, please contact Ameri-King Corporation to request the brochures and Operation Manual for the ELT Computer Test Set.

When used with ELT's that are programmed for Standard Location 24 bit protocol, the ELT to be program itself to the aircraft's 24 bit address. This feature will allow the ELT to be transferred between aircraft. This makes maintenance of the ELT a simple matter of replacing the ELT. Note: There is no electronic connection between TCAS or Mode S systems and the ELT, only the ID number is common.

The AK-451 receives position data (longitude and latitude) from the aircraft's on-board GPS system. The ELT may be programmed with the aircraft's 24 bit address. When used with ELT's that are programmed for long message 24 bit protocol, which is set up to match the 24 bit address parity of the Mode S surveillance and communications system switch block.

Note: There is no electronic connection between TCAS or Mode S systems and the ELT, only the ID number is common. This feature was implemented in the ELT with fleet operators in mind. ELT's are programmed with either a serialized or 24 bit protocol. The ELT transmits position data as part of the 406.025 MHz distress message.

In the event of a crash, the ELT will transmit the converted position information from the navigation system, such as the GPS flight management computer, loran, etc. Geostationary satellites constantly monitor the 406.025 MHz transmissions. The crash site is instantly known due to the aircraft's navigation system position data

communication with the ELT. Without the position data being transmitted, it is necessary for the polar orbiting satellites to pass overhead, using Doppler Shift technology to determine position. In a worst case scenario this could be a 3 to 4 hour wait for a polar orbiting satellite to pass over. In addition, the accuracy of the position fix is much better i.e. 22 meters (with GPS/Nav Position data) versus 1 to 2 kilometers for the standard 406.028 MHz system (without GPS/NAV Position data).

The ELT accept Aviation RS-232 data bus formats. By reprogramming the ELT with the aircraft's 24 bit identification or serialized (long message format), this facilitates moving the ELT from one aircraft to another when performing routine maintenance, etc.

WARNING: The programming and labeling of the ELT must match the aircraft it is installed in. The product label will have to be re-marked to reflect the new programming and/or country of registry if a 24-Bit address long message protocol ELT is reprogrammed.

Re-registration may not be required if the contact information does not change; however, contact your local civil aviation or beacon registration authority when in doubt.

Both serialized long message and 24-Bit address long message, re-programmed ELT, that is moved to another aircraft, shall need to be re-registered Online or by Mail.

The user must specify 24-bit long message programming when ordering the ELT. Changing the programming protocol of the ELT can only be done at Ameri-King or an authorized Ameri-King Repair Station.

3.4.10.2. ELT/GPS Interface Communication Formats

The only Aviation RS-232 format which is supported is limited to the following conditions:

Baud Rate (fixed):	9600
Parity:	None
Data Bits:	8
Stop Bits:	1

In addition the RS-232 format must have a Start of Text (STX): an **"A"** identifier for latitude; a **"B"** identifier for longitude and END of Text **(ETX)**. The format expects carriage returns but will not operate if there are line feeds.

The following manufacturer's navigation systems are known to interface with the AK-451:

GARMIN INTERNATIONAL INC.:
• All Series: 150/ 250/ 400/420/430/ 500/520/530
HONEYWELL BENDIX-KING INC.:
• KLN 88, KLN89, KLN89B, KLN 90, KLN90B, KLN94, KLN900.
ARNAV SYSTEMS INC.:
• R50, R50i, STAR 5000, FMS 5000, MFD (Multi-Functional Display).

II MORROW:
• FLYBUDDY, 2001 NMS
TRIMBLE NAV INC.:
• NAV 1000, NAV 2000, TNL 2100, and TNL3100. The following Trimble systems all require a RS-422 to RS-232 adapter: NAV 3000, TNL 1000, TNL 2000, TNL 2000A, TNL 3000, 2000 APPROACH, 2000 APPROACH PLUS, 2101 APPROACH, 2101 APPROACH PLUS, 2101 I/O APPROACH, 2101 I/O APPROACH PLUS.

For other equipment models contact that equipment manufacturer to determine if their equipment supports the Aviation RS-232 format specified above.

3.4.10.3 ELT/FMC Interface and Checkout Process

All installation processes and interconnections to navigation systems should adhere to the guidelines set forth in the FAA Advisory Circulars 43.13-2B, 20-130A and 20-138, or later revisions of these documents. It is very important that the Global Positioning System/Flight Management Computer (GPS/FMC) manufacturer's installation instructions be consulted regarding installation details that may be specific to the GPS/FMC. Refer to the installation instructions specific to the GPS/FMC that you are connecting the ELT for specific instructions.
For all testing of the 406 MHz output, only the "test message" that is transmitted at turn off is required to verify the ELT and ELT/GPS Interface function.

Note: It is extremely important that the ELT/GPS Interface installation not be in conflict with the GPS/FMC manufacturer's installation instructions in order to avoid an installation that may degrade the GPS/FMC performance. As a result, the Post Installation checkout in the GPS/FMC Installation Manual may be followed after installing the ELT.

3.4.10.4 24-Bit Address Installation Test (mandatory for Installations reprogramming by Ameri-King's authorized dealer):

Verify the 24 Bit Address by using the ELT Computer Test Set TS-451 or equivalent. The 15 digit hex code shall be extracted by using the Computer Test Set or equivalent. Realize that the AK-451 transmits a 406 MHz test message, which is encoded such that it will be ignored by the SAR satellite system. This 15-digit number is used to register the ELT with the appropriate 406 MHz ELT registration authority. In the US, the National Oceanic and Atmospheric Administration (NOAA) maintains the database of registered ELT's.

Note: Although a typical 15 digit hex code can contain position data, the 15-digit ID used for registration purposes shall contain the "default' value of no position data instead (this is indicated by the last 5 digits of the 15 digit hex code being "FFBFF").

3.4.10.5 GPS Position Test, if equipped (for using TS-451 Computer Test Set or equivalent) :

Note: Per FCC Regulation, this test should be conducted inside a RF shielded room or an ELT RF shielded box. Dummy 50 ohm Load should be used.

- Connect the AK-451 with ELT Computer Test Set TS-451.
- Turn the switch of the ELT to "ON" position.
- Verify the following setting (See Figure 20.) From the Hyper Terminal window (or the equivalent RS-232 window), Click File -> Properties -> Settings tab. Click OK to go back to Hyper Terminal window.

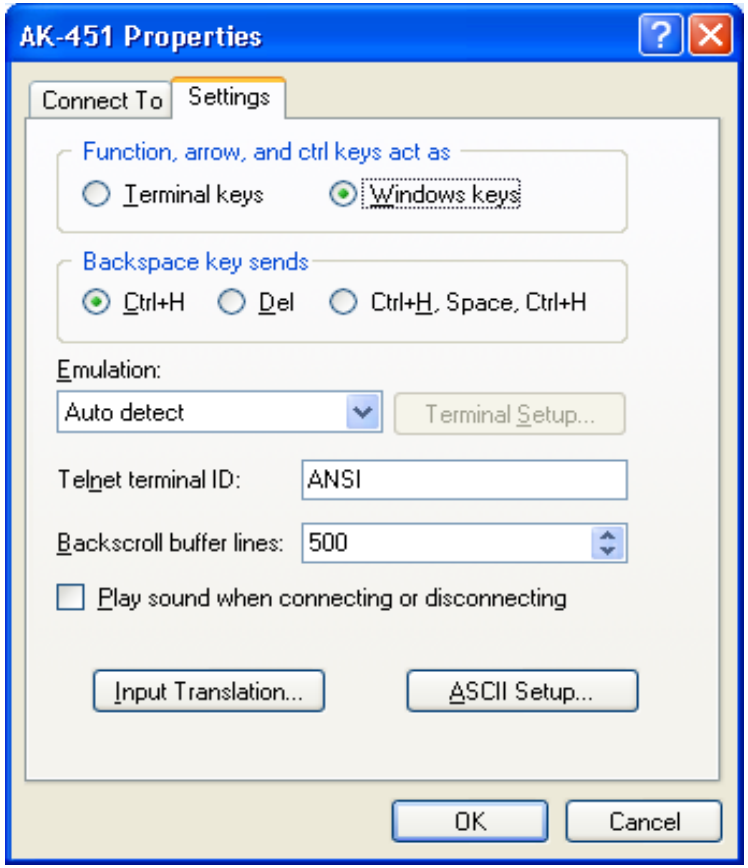

Figure 20: Verify parameter setting.

Waiting for 50s, verify the 36 Hex digits (ignore first 6 digits). The last 30 Hex digits will be used for Cospas-Sarsat Decode program, in order to see the Latitude, Longitude Position.

Note: When used with ELT's that are programmed for Standard Location 24 bit protocol, the ELT to be program itself to the aircraft's 24 bit address. This feature will allow the ELT to be transferred between aircraft. Re-register the ELT with the Search and Rescue authority is required. This makes maintenance of the ELT a simple matter of replacing the ELT. Note: There is no electronic connection between TCAS or Mode S systems and the ELT, only the ID number is common.

3.5 PERIODIC MAINTENANCE (INSTRUCTION FOR CONTINUED AIRWORTHINESS FOR CANADIAN INSTALLATION:

REFERENCES:
Canadian Aviation Regulations CAR Standards: Part V – Airworthiness Manual AWM 571: Appendix G.
Refer to Appendix B for Maintenance Check List with Compliance Cross References.

PURPOSE:
Instructions for continued airworthiness, which shall include as a minimum, details of approved batteries and sources of supply; battery replacement or recharge instructions; battery capacity test procedures, if applicable; transmission or functional test procedures; procedures necessary to accomplish the performance tests specified in Chapter 571 Appendix G ; and for 406 MHz ELTs, instructions to verify the aircraft 24 bit address protocol as applicable;

Appendix G
(a) Corrosion Inspection
(b) Operational Testing
(c) Performance Testing
(d) Battery Replacement and Recharging
(e) Shipping

IMPORTANT NOTES:
The ELT must be "performance tested within the 12 month period preceding installation in an Aircraft and within 12 months intervals thereafter…"

The following Supplemental Installation and Periodic Maintenance requirements must be complied with, when installing the Model AK-451 ELT in Canadian Aircraft:

SUPPLEMENTAL INSTALLATION

Installation and maintenance of the ELT must comply with Transport Canada Airworthiness Manual Chapter AWM 551.104 (f)(4) Transmitter Remote Control

A Placard shall be fabricated and installed near the Remote Unit which states:

FOR AVIATION EMERGENCY USE ONLY
UNAUTHORIZED OPERATION PROHIBITED

PERIODIC MAINTENANCE (at least every year)

Note:
*** These tests should be performed only within an RF Screen Room or Facility providing shielding of RF Emissions.**
*** Using of ELT Test set TS-451 or equivalent test equipment is acceptable**

3.5.1 Regular Periodic Maintenance Test

Perform Periodic Maintenance Test per paragraph 3.4 above, including all Test paragraphs 3.4.1 through 3.4.10.

In addition to the Periodic Maintenance requirements prescribed in Paragraph 3.4, the following **Performance Testing** must be performed, at least every year, to comply with Canadian Aviation Regulations CAR Standards: Part V – Airworthiness Manual 571: Appendix G.

3.5.2 Power Output Test, Performance Testing

NOTE: Using of ELT Test set TS-451 or equivalent test equipment is acceptable

3.5.2.1 121.5/243.0 MHz Power Output:

Connect the equipment as shown below:

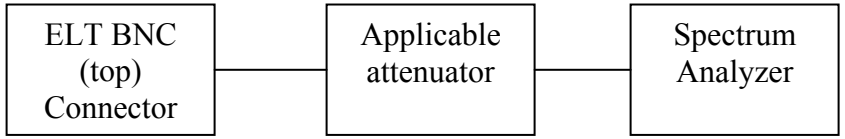

Note:
Use as fresh battery pack (12.5 ± 0.5 VDC nominal) or a 2 amp, 12.5 VDC power supply as power source.

The test equipment specified in the following steps is only a recommendation. The use of other manufacturer's models of test equipment capable of providing equivalent measurement results is acceptable.

Set the Spectrum Analyzer as follows:
- Center freq: 121.5 MHz
- Span: 1 MHz
- Resolution bandwidth: 1 MHz
- Vertical display: 10dB/Div
- Sweep: Auto
- Peak/Avg: Peak
- Reference level: 30 dBm
- Time/Div: 20ms

- Adjust the reference amplitude to place the peak of the carrier slightly above the top graticule fine.
- Enable the "fine" amplitude adjustment. Set the carrier peak to exactly the top of the reference line.
- Read the displayed amplitude.
- Repeat for the 243.0 MHz harmonic (change the "Center Frequency" to 243.0 MHz. All other settings remain the same).
- The minimum allowed amplitude on 121.5 MHz and 243.0 MHz is 20 dBm, after 3 minutes of operation.

3.5.2.2 406.028 MHz Power Output:

Note:
The power output is approximately (35.34 – 38.18) dBm. Ensure adequate attenuation is inserted in-line between the ELT's 406.028 MHz output and the input to the spectrum analyzer to protect the analyzer's input circuitry.

Connect the equipment as shown below:

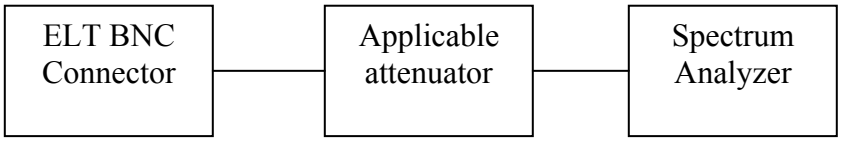

Set the Spectrum Analyzer as follows:
- Center freq: 406.028 MHz
- Span: 1 MHz
- Resolution bandwidth: 1 MHz
- Vertical display: 10dB/Div
- Sweep: Auto
- Peak/Avg: Peak
- Reference level: 30 dBm
- Time/Div: 20ms
- Max hold: On
- Attenuator (as required) on Input

Turn the ELT on and wait approximately 50 seconds for the 406.028 MHz transmitter to turn on (transmitter sends out first signal at 50 seconds then every 50 seconds thereafter). Determine the power output from the stored waveform.

The 406.028 MHz power output should be (35.34 – 38.18) dBm (3.42W min to 6.58W max), after 3 minutes of operation.

3.5.3 Frequency Test / Current Draw Test, Performance Testing:

NOTE: Using of ELT Test set TS-451 or equivalent test equipment is acceptable

The ELT Transmitter frequency may be measured as follows:

3.5.3.1 Connect the Frequency Counter as shown below:

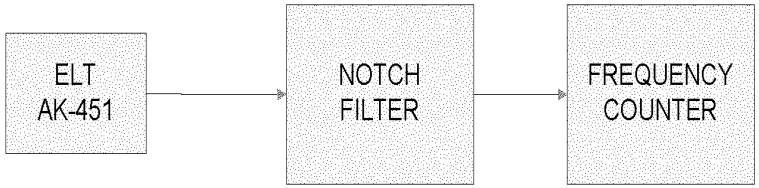

3.5.3.2 Measure the 121.5 / 243.0 MHz frequency:

Select the Notch filter as appropriate, i.e. 243 notch when measuring 121.5 MHz.
The ELT should be within 50ppm (± 6.075 KHz) of 121,500,000 Hz.

Repeat with the 121.5 MHz Notch Filter. The ELT frequency should be within 50 ppm (± 12.150 KHz) of 243,000,000 Hz, after 3 minutes of operation.

3.5.3.3 Measure the 406.028 MHz frequency:

Ensure that adequate attenuation rated for 406.028 MHz, 37 dBm and 5 Watts is installed between the ELT's 406.028 MHz output and the input to the frequency counter to prevent damaging the frequency counter's input circuitry.

Set up the equipment as shown below:

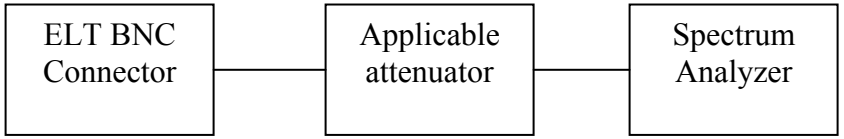

Verify an initial frequency of 406.028 MHz +/- 1 KHz, after 3 minutes of operation.

Note:
Allow the unit to run 3 minutes, before making the measurement to allow the oscillator to stabilize.

3.5.3.4 Current draw tests:

CAUTION: The following tests involve measurement of the lithium battery pack. Exercise extreme caution to avoid causing a short circuit condition which will blow the fuse in the battery cell. It is recommended that only an experience technician perform these tests.

A test harness (P/N TS-451-HN-1) may be ordered from Ameri-King Corp. at 714-842-8555

All tests must be performed in an RF screen room or with the ELT in a shielded container that will substantially attenuate the RF signal.

All "ON" state current measurements must be made with the RF outputs loaded with 50 ohms rated for 5 watts (either a resistive load or equipment with 50 ohm impedance padded with 10 dB / 5 Watt attenuator, i.e. a spectrum analyzer).

NOTE: the ELT may activate (turn "ON") when the various connections are initially made during the following current tests. This is normal. Press the RESET Switch, to Reset the unit.

"OFF" Mode Current Measurement:

- Remove the battery pack as described in Section 2.5.1
- Disconnect the 2-pin harness
- Install the test harness P/N TS-451-HN-1 and inline ammeter as shown in Fig. 4-2
- Ensure the ELT is "OFF"
- Measure the current with the ammeter. The measured current should be 0 microamps (uA).

"ARM" Mode Current Measurement:

- Measure the current with the ammeter. The measured current should be not more than 20 uA.

"ON" Mode Current Measurement:

Note: Current draw during this test may exceed 2.0 Amps during the 406.028 MHz burst. Ensure the ammeter is set on the appropriate range to accommodate this level of current.

- Activate the ELT by select ON, allow it to stabilize.
- The measured steady state current should not exceed 150 milliamps (mA). When the 406.028 MHz module is on (generating the 406.028 MHz burst) the current may exceed 2.0 amps.
- Turn the ELT OFF
- Disconnect the test harness P/N TS-451-HN1
- Reconnect the 2-pin module power harness
- Reinstall the battery pack as described in Section 4.3.4

3.5.4 AUDIO MODULATION, PERFORMANCE TESTING:

Perform the transmitter tests by activating the ELT and listening on 121.5 MHz. The audio swept tone should “sound” like an ELT.

3.5.5 TRANSMITTER FUNCTIONAL TEST:

Perform Transmitter Functional Test per paragraph 3.3 above, including all Test paragraphs 3.3.1 through 3.3.5.

Note: All ELT “ON” tests should be performed within the first five minutes of the hour.

3.5.6 PERFORMANCE TEST MARKING AND LOG BOOK ENTRY:

Following satisfactory completion of all of the above Performance Testing, the date on which the test was performed shall be marked on the external casing in a legible and permanent manner.

Enter the test date and Technician Initials, as ELT Pass or Fail, into the aircraft Log Book.

3.5.7 SHIPPING:

In order to prevent accidental activation of the ELT during transit, the ELT ON/OFF/ARM Main Switch must be set in the “OFF” position.
Note: The ON/OFF/ARM Switch is lever locked type.

SECTION IV
REGISTRATION AND RESPONSBLE USE

4.1 REGISTRATION

4.1.1 Registration Importance

It is mandatory that the owner of this 406 MHz ELT registers it with the National Authorities. All 406 MHz ELTs transmit a Unique Identifier Number (UIN) when activated. This UIN is programmed in the ELT based on the country in which the Aircraft operates. ELT Registration provides the Search and Rescue (SAR) forces with emergency contact information, and will speed the launch of a rescue operation. The National Authorities use the information to verify if an actual emergency exists. Valuable Search and Rescue resources are wasted every year responding to false alarms. For ELTs that are not registered, SAR authorities will not know who you are, or who to contact regarding additional information of your current situation. This could delay the launch of a rescue operation. A National Authority is the governmental body that is responsible for ELT Registration Database administration for the country for which the ELT is programmed.

Supplied with the ELT are pre-stamped envelope and ELT registration form with 15-digit hex ID ELT programmed code and Country 3-digit code. This hex ID must be the same as the 15-digit hex ID shown on the ELT name plate.

It is important to fill in the sticker "This ELT belongs to A/C Tail # _____."

4.1.2 Where to register

The owner of a 406 MHz ELT should register it with the National Authority of which the ELT was programmed, (typically the country where purchased), regardless of where you use your ELT. Each ELT is programmed with a UIN for the country where the unit is shipped, and will only be accepted for registration in that country. To verify the country, for which an ELT is programmed, see the label with the UIN on the back of the unit. Units that do not have a country specified on the UIN label are programmed for the United States.

For a list of the national authorities in your area please go to:
http://www.cospassarsat.com/Management/listOfParticipants.htm

4.1.3 Registration in the United States

It is the Owner's responsibility and required by law to Register 406 MHz ELTs that are programmed for and purchased in the United States. The National Authority that accepts registrations in the United States is the National Oceanic and Atmospheric Administration (NOAA). The owner should complete the enclosed registration form (Do not confuse this with the Ameri-King Corp. Warranty Card) and mail it with the pre-addressed; postage paid envelope to (see Appendix F):

SARSAT BEACON REGISTRATION
E/SP3, RM 3320, FB-4
NOAA/NESDIS
5200 Auth Rd., Suitland, MD 20746-4304

ELT registration is also available online at: www.beaconregistration.noaa.gov

The information provided on the Registration Form is used only for rescue purposes. The Registration Form should be filled out and mailed immediately. Registration can be expedited by faxing the registration form or by completing the form online in the event the ELT is to be placed in immediate use.

Typically, registration forms will be entered in the 406 MHz ELT Registration Database within 48 hours of receipt. A confirmation letter, a copy of the actual registration and a proof-of-registration decal will be mailed to you within two weeks. When you receive these documents, please check the information carefully and affix the decal to your ELT in the area marked "Beacon Decal here", on the Bottom or Left Side of ELT. If you do not receive confirmation, contact NOAA for additional information at: +1-888-212-7283.

4.1.4 Registration in Canada

The National Authority in Canada is the NSS (National Search & Rescue Secretariat). Canadian residents can register online at http://beacons.nss.gc.ca

For more information please contact the NSS at

Canadian Beacon Registry
CFB Trenton, PO Box 1000 Stn Forces
Astra, ON K0K 3W0
Phone 1-877-406-SOS1 (7671)
Fax 1-877-406-FAX8 (3298)
Email: cbr@sarnet.dnd.ca
Online: www.canadianbeaconregistry.forces.gc.ca

4.1.5 Registration Outside of the United States and Canada

In countries other than the United States, 406 MHz ELTs are registered with that country's National Authority at the time of Purchase. The Sales agent should assist in filling out the forms and sending to that country's National Authority. To verify that the unit is properly programmed for that country, view the UIN label on the side of the unit. In the event that the ELT is not programmed for the country in which it has been purchased, the sales agent, (if properly equipped) can reprogram the unit for that country. Go to https://www.406registration.com/ to register online (see Appendix G)

4.1.6 Change of ownership or contact information

It is the owner's responsibility to advise the National Authority of any change in the information on the registration form. If the current owner of the ELT is transferring the to a new owner, the current owner is required to inform the National Authority by Letter, Fax or telephone, of the name and address of the new owner. The new owner of the ELT is required to provide the National Authority with all of the information requested on the Registration form. This obligation transfers to all subsequent owners. Registration forms are available from NOAA, call +1(888) 212-7283

4.1.7 Lost ELT's

Inform NOAA immediately at 1-888-212-SAVE (7283), or your national authority, that your ELT has been lost. They will update your ELT registration information with the appropriate information.

4.1.8 Stolen ELT's

Things That You Need To Do:

- Report to your local police department that the ELT has been stolen.
- Contact NOAA at 1-888-212-SAVE (7283), or your national authority, with the following information so your registration information can be updated with the appropriate remarks:

  - Police Department Name
  - Police Phone Number
  - Police Case Number

If your ELT was to activate, the information you provide will be forwarded to the appropriate Search and Rescue Authorities who will ensure that your ELT gets back to you. And, if someone attempts to register a ELT reported as stolen, NOAA or your national authority will notify the appropriate Police Department.

Visit the COSPAS-SARSAT website for more detailed information: www.cospas-sarsat.org

4.2 RESPONSIBILITY

4.2.1 Responsible Use:

The **Ameri-King AK-451** should only be used in situations of grave and imminent danger! What exactly does this mean? Technically speaking you should only activate your ELT when all other means of self rescue have been exhausted. This means you have tried to use your cellular/satellite phone, signaling mirrors, strobe lights, or any other safety device you may have. When all else fails and you feel your situation has truly become extreme, ask yourself the following questions:

- Am I in danger of losing life, limb, eye sight, or valuable property if I am not rescued soon?

- Am I in danger of not surviving the night or upcoming hours if not rescued soon?

If you answer yes with confidence to these questions, it is time to activate your ELT.

4.2.2 Preventing False Alarms

- Ensure that your ELT is registered with NOAA or your national authority. This does nothing to reduce false alarm rates, but does have a dramatic effect on the impact of a false alarm. If the ELT is properly registered, the situation will be resolved with a phone call most of the time. It will also help speed rescue in an actual distress. Test your ELT in accordance with the recommendations enclosed in this manual.

- Use care when leaving your ELT and with whom you leave it with. Ensure that they are aware of the device and know the ramifications of causing a false alarm. A lot of false alarms are generated by curious individuals.

- Maintain your ELT. Ensure that the batteries are within their expiration date and that all manufacturer recommendations are followed.

- Finally, realize that the COSPAS-SARSAT satellites are very good at what they do, detecting emergency ELTs. An activation of a 406 MHz for just a few seconds will usually be detected. After a few minutes, it will usually be detected and located. This is good if you're in distress, but if you're not, you just generated a false alarm.

4.2.3 Report false alarms

Should there be an inadvertent activation or false alarm, it must be reported to the nearest search and rescue authorities. The information that should be reported includes the ELT Unique Identifier Number (UIN), Date, Time, duration and cause of activation, as well as location of ELT at the time of activation. Outside the United States contact your National Authority.

4.2.4 To report false alarms in the United States contact any of the following:

Atlantic Ocean / Gulf of Mexico
USCG Atlantic Area Command Center..... Tel: (757) 398-6390

Pacific Ocean Area
USCG Atlantic Area Command Center..... Tel: (510) 437-3700

USCG HQ Command Center (From any location).. Tel: (800) 323-7233

NOAA ..... Tel: 1-888-212-SAVE (7283)

AFRCC Console
(For official mission correspondence only)..... Tel: 800-851-3051

SECTION V
WARRANTY

5.1 LIMITED WARRANTY

All equipments manufactured by Ameri-King Corp. are guaranteed against defective materials and workmanship for a period of two years.

Any equipment found to be defective due to material and workmanship during this limited warranty will be repaired and put in original manufactured operating condition.

An option of extended third and fourth year limited warranty becomes valid at the end of this second year, which will warrant to the original owner.

This Ameri-King Corp. warranty is void unless the Warranty Registration Card is filled out and returned to Ameri-King Corp. within 15 days after original installation.

Ameri-King Corp.'s liability under this warranty is limited to servicing, repairing, replacing or adjusting any equipment returned prepaid to the factory by express written or oral authorization for that purpose and to repair or replace defective parts thereof. This limited warranty does not include any damage caused by the leakage of batteries. Repaired equipment will be returned to the equipment user freight pre-paid. Shipping charge will be paid one way only by Ameri-King Corp.

Upon discovery of a condition believed to be caused by a defect in manufacturing, Ameri-King Corp. without prior authorization. Any equipment returned to Ameri-King Corp. without prior authorization. Any equipment returned to Ameri-King Corp. should be accompanied by a failure report, in writing, giving full particulars in support of the claim.

This limited warranty does not cover or apply to any of the followings, including: misuses of the equipment; installation or operation not in accordance with factory instructions; accidences or negligent damage; alterations of any manner; repair by other factory; changes in calibration occurring as a result of normal use of equipment; the cost of labor, material, or other expense incidental to the repair, installation, removal from the aircraft or replacement of the equipment; damaged during shipment or installation; any personal injuries or damage to property resulting from the installation or the operation of the equipment user assumes the risks of all such injuries or damage. In such cases, the repair will be billed at cost. An estimate will be submitted for approval before repair is initiated.

Any equipment that is returned for warranty and found not to be defective shall be charged a minimum handling and service charge and returned C.O.D.

No warranty will be activated for Ameri-King Corp. products unless the installation is approved by an FAA Certified Installer and the warranty card is completed by the supplying dealer or upon receipt by Ameri-King Corp. of form(s) 337 or 8130-().

THE IMPLIED WARRANTY AND ALL OTHER IMPLIED WARRANTIES ARE HEREBY EXCULED. AMERI-KING CORP. MAKES NO OTHER WARRANTY OR REPRESENTATION OF ANY KIND WHATSOEVER EXPRESSED OR IMPLIED, AND ALL IMPLIED WARRANTIES INCLUDING ANY WARRANTY OF MERCHANTABILITY OR FITNESS FOR A PARTICULAR PURPOSE ARE HEREBY DISCLAIMED.

AMERI-KING CORP.'S MAXIMUM LIABILITY HEREUNDER IS LIMITED TO THE PURCHASED PRICE OF THE PRODUCT. IN NO EVEN SHALL AMERI-KING CORP. BE LIABLE FOR ANY DAMAGES OF ANY NATURE ARISING FROM THE SALE OR USE OF THE PRODUCT, WHETHER BASED IN CONTRACT, TORT, STRICT LIABILITY OR OTHERWISE.

5.2 REPAIR SERVICE

All equipments manufactured by Ameri-King Corp. must be repaired at the facility of Ameri-King Corp.

The entire repair service shall be performed and completed within 3 days upon repairing estimate is approved by equipment user or installation dealer.

IMPORTANT NOTE:
In order to prevent accidental activation of the ELT during transit, the ELT ON/OFF/ARM Main Switch must be set in the "OFF" position.
Note: The ON/OFF/ARM Switch is lever locked type.

5.3 FACTORY COMPREHENSIVE TEST SERVICE

Factory Comprehensive Test Service including Digital Message, GPS Position, G-Switch activation levels testing, RF Peak Effective Radiated Power, Operating Carrier Frequency, Modulation Characteristics, Duty Cycles and Activation Monitor are available. There is a service charge for this service. All equipments returned for Factory Comprehensive Test Service must be sent freight prepaid.

APPENDIX A

RETROFIT INSTRUCTIONS FROM AK-450 TO AK-451

Old Model No.: **AK-450-(AF)(AP), ELT 121,5/243 MHz.**
New Model No.: **AK-451-(AF)(AP), ELT 406/121,5/243 MHz.**

RETROFIT INSTRUCTIONS:

1. Swap the followings items: ELT with mounting tray; Antenna with Coaxial Cable; Remote Switch Unit with Buzzer.

Note 1: All mounting holes and cut out holes are exactly the same.
Note 2: Wiring Harness, between ELT and Remote Switch Unit, is exactly the same i.e. Do not change the wiring harness. It is OK to use the existing AK-450 wiring.
Note 3: Adding a new Buzzer to be mounted anywhere in the cockpit, i.e. Tie wrap into the aircraft Wiring Harness, or Fasten onto or behind the instrument Panel, or fasten on the Remote Switch Unit.

2. Register with NOAA (or IBRD) (or National) via on line, or mailing the Registration Form using the provided pre-stamped envelop.

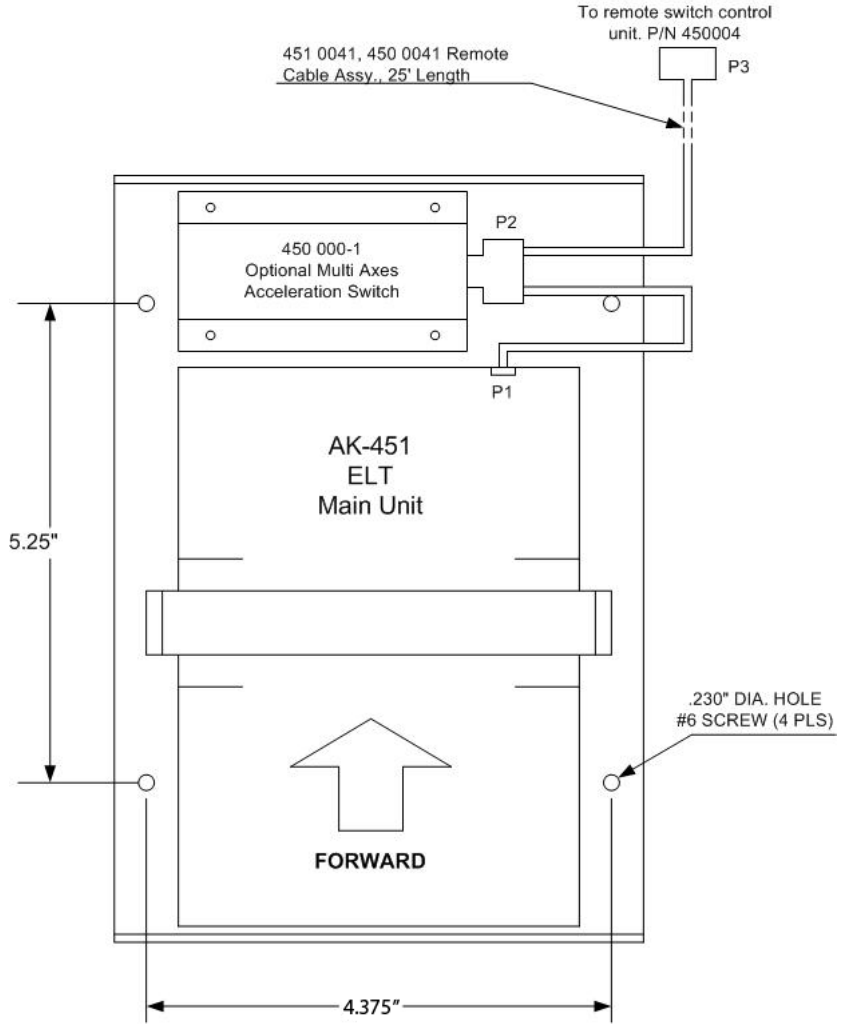

Notes:
1. The Mounting Tray for both ELT Main Unit and Optional Multi-axes Acceleration Switch must be installed on the Horizontal Plane.
The Optional Multi-axes Acceleration Switch must be installed next to the ELT Main Unit for crash safety.

2. In addition to the main Acceleration Switch, which located inside the ELT Main Unit, the remote Optional Multi-axes Acceleration Switch Assy contains 6 separated individual acceleration switches that allows opearation on different axes.
Lacking of the remote optional multi-axes acceleration switch assy has no effect to the ELT operation.
This multi-axes sensing, using active axis parallel to the longitudinal axis of the aircraft, moving in the forward direction.

Part No. 450000-1
Dimensional Drawing for Mounting Tray for ELT Main Unit with Optional Multi-axes Acceleration Switch

Figure 2.3

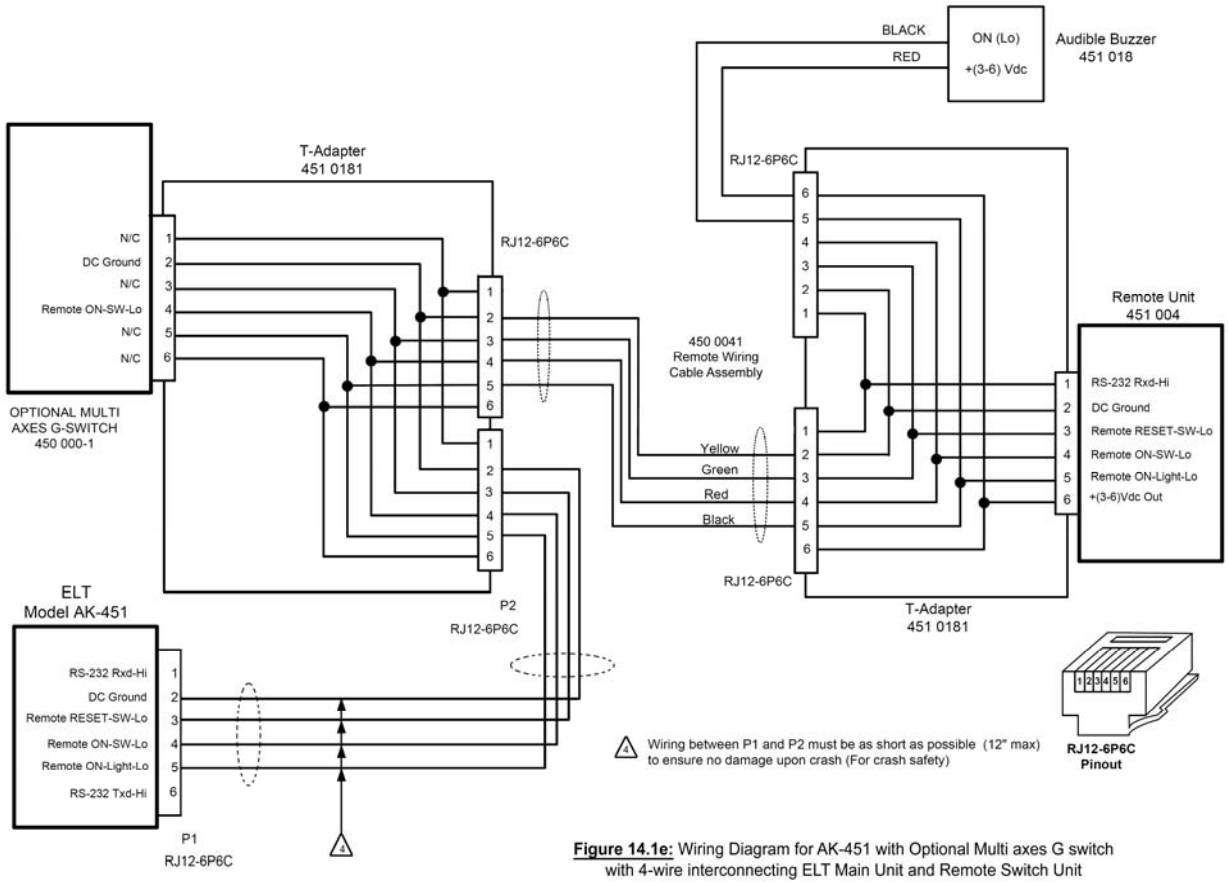

Figure 14.1e: Wiring Diagram for AK-451 with Optional Multi axes G switch with 4-wire interconnecting ELT Main Unit and Remote Switch Unit

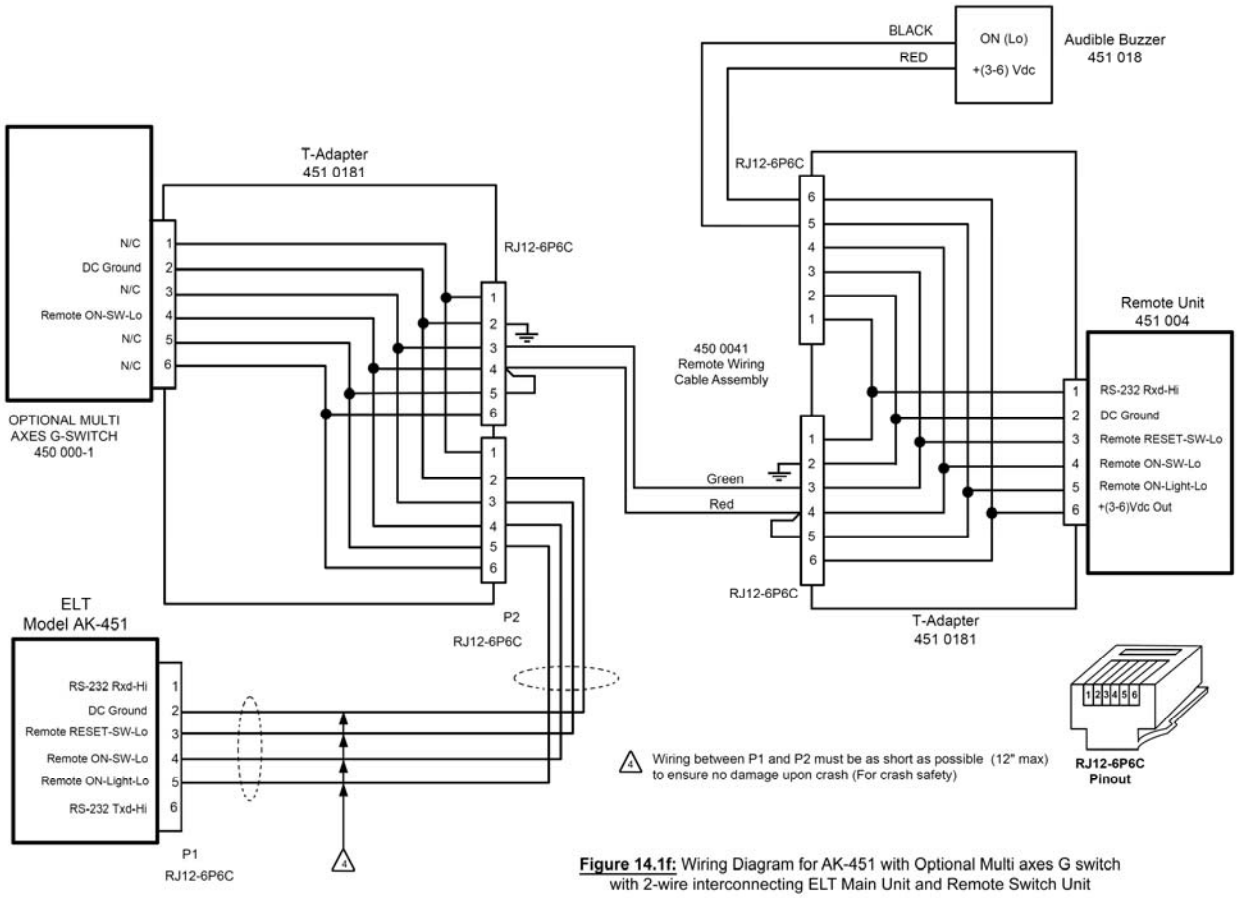

Figure 14.1f: Wiring Diagram for AK-451 with Optional Multi axes G switch with 2-wire interconnecting ELT Main Unit and Remote Switch Unit

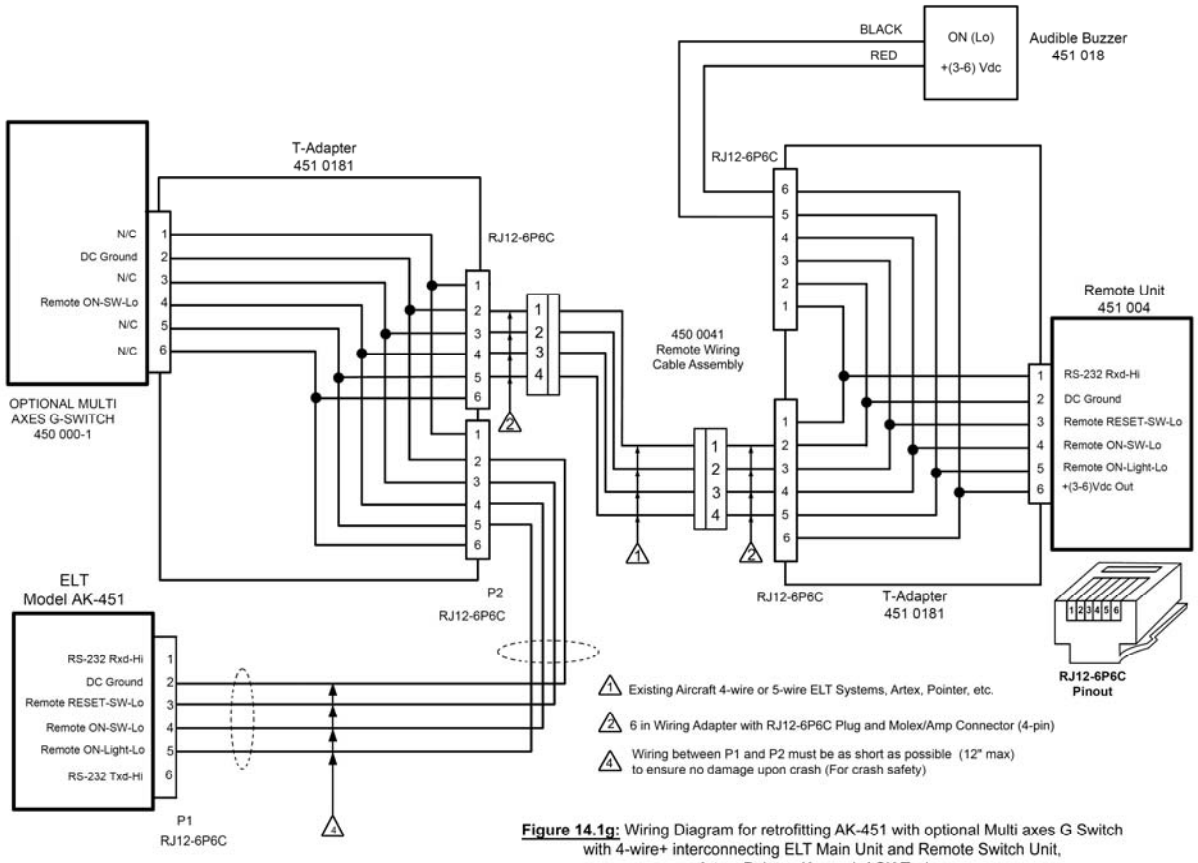

Figure 14.1g: Wiring Diagram for retrofitting AK-451 with optional Multi axes G Switch with 4-wire+ interconnecting ELT Main Unit and Remote Switch Unit, Artex, Pointer, Kannad, ACK Tech...

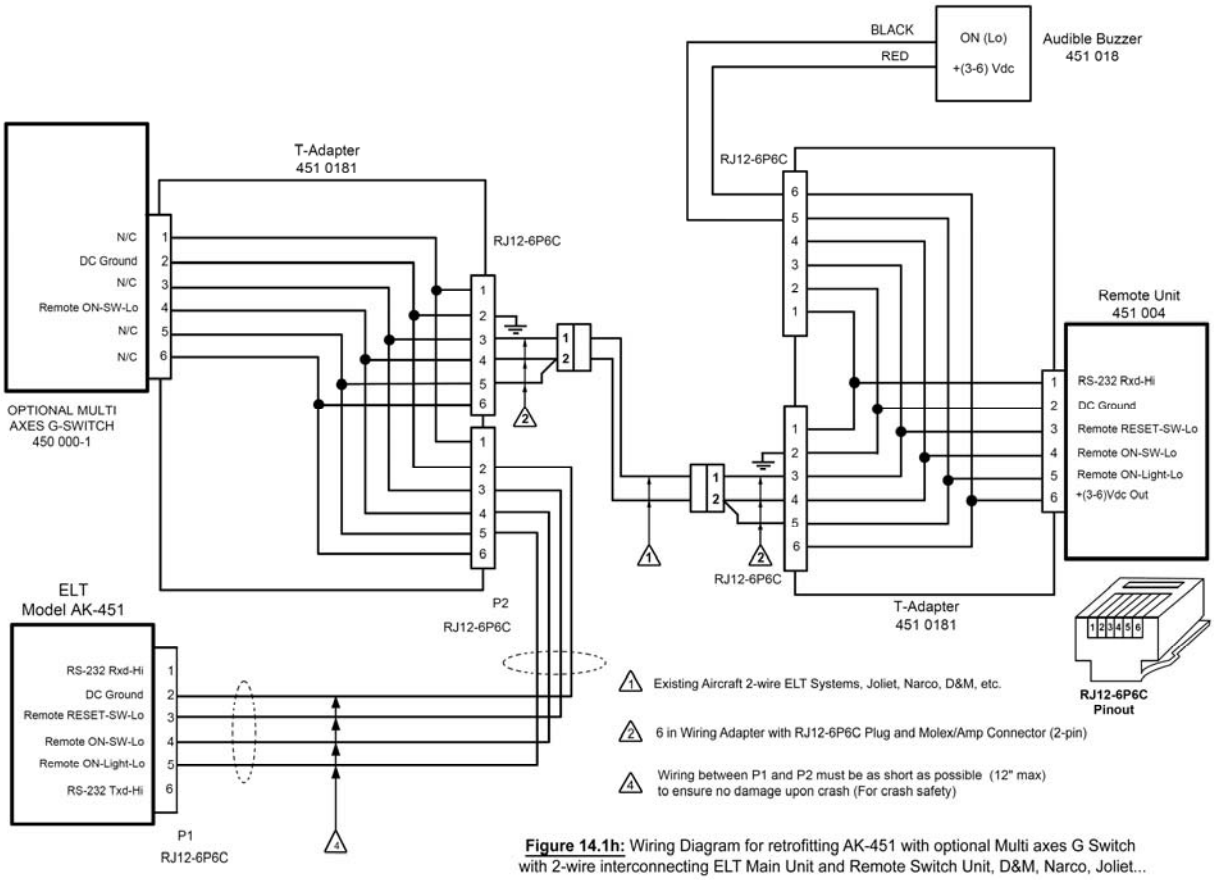

Figure 14.1h: Wiring Diagram for retrofitting AK-451 with optional Multi axes G Switch with 2-wire interconnecting ELT Main Unit and Remote Switch Unit, D&M, Narco, Joliet...

GARMIN			BENDIX/KING		
GPS 150	400/420/430	500/520/530	KLN-89B/94	KLN-90B	KLN-900
J100	P4001	P5001	P891	J901	P9002
24 (RS-232 Out 1) (Tx Data Hi)	56 (RS-232 Out 1) (Tx Data Hi)	56 (RS-232 Out 1) (Tx Data Hi)	2 (Gen RS-232 Out 1) (Tx Data Hi)	13 (Gen RS-232 Out 1) (Tx Data Hi)	6 (Gen RS-232 Out 1) (Tx Data Hi)
26 (A/C Ground)	77, 78 (A/C Ground)	77, 78 (A/C Ground)	14 (A/C Ground)	27 (A/C Ground)	27 (A/C Ground)

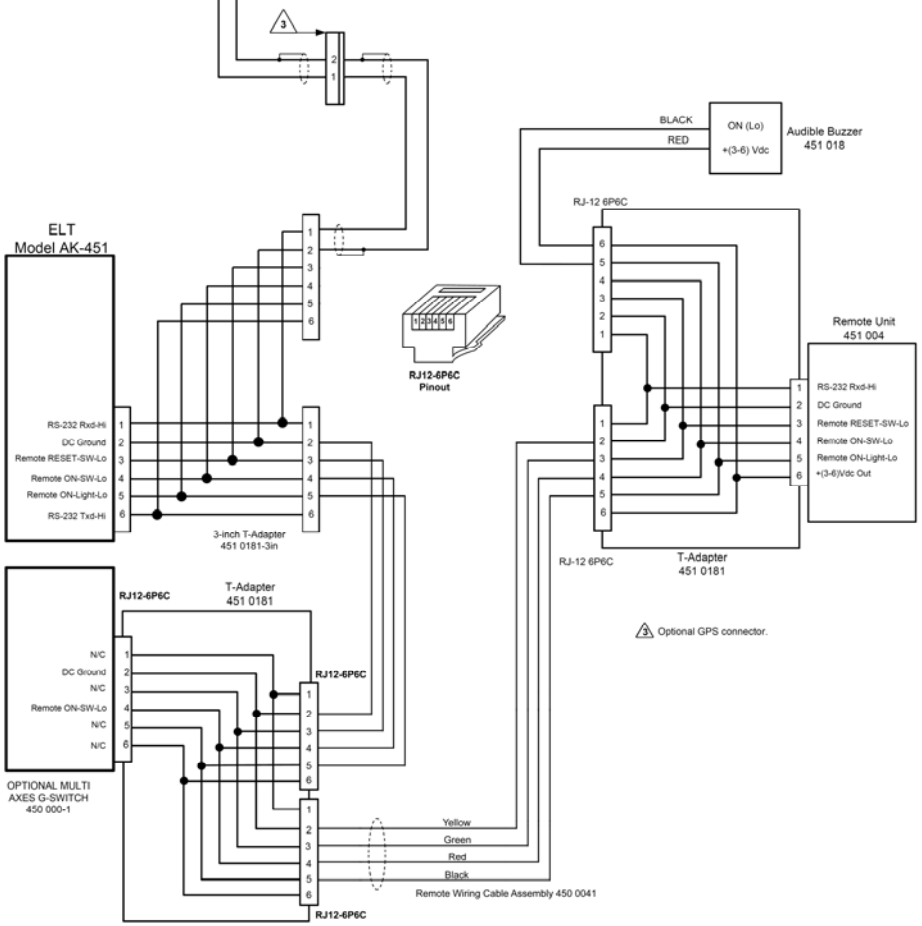

NOTE: P/N 450 0041M Optional Mil Spec M22759/18 or /35 (24AWG) at specified length is available.

Figure 14.2c: Wiring Diagram for AK-451 with GPS Position and 3-inch T adapter with Optional Multi axes G Switch with 4-wire interconnecting ELT Main Unit and Remote Switch Unit

GARMIN			BENDIX/KING		
GPS 150	400/420/430	500/520/530	KLN-89B/94	KLN-90B	KLN-900
J100	P4001	P5001	P891	J901	P9002
24 (RS-232 Out 1) (Tx Data Hi)	56 (RS-232 Out 1) (Tx Data Hi)	56 (RS-232 Out 1) (Tx Data Hi)	2 (Gen RS-232 Out 1) (Tx Data Hi)	13 (Gen RS-232 Out 1) (Tx Data Hi)	6 (Gen RS-232 Out 1) (Tx Data Hi)
26 (A/C Ground)	77, 78 (A/C Ground)	77, 78 (A/C Ground)	14 (A/C Ground)	27 (A/C Ground)	27 (A/C Ground)

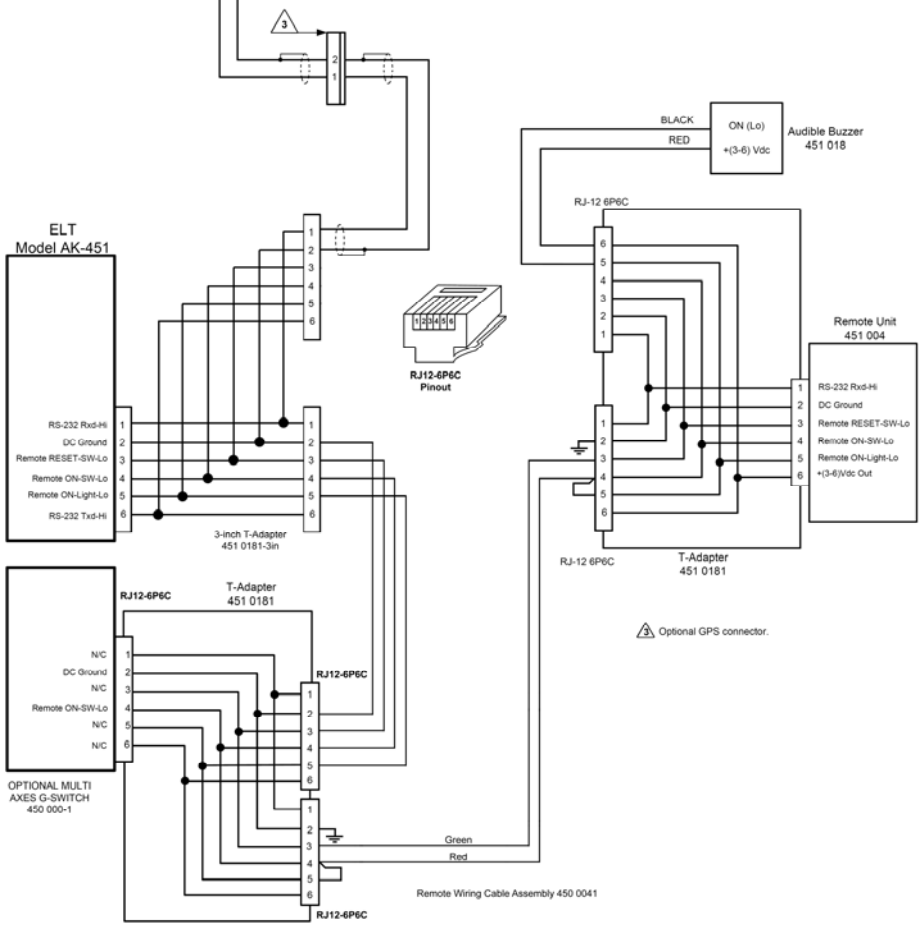

NOTE: P/N 450 0041M Optional Mil Spec M22759/18 or /35 (24AWG) at specified length is available.

Figure 14.2d: Wiring Diagram for AK-451 with GPS Position and 3-inch T adapter with Optional Multi axes G Switch with 2-wire interconnecting ELT Main Unit and Remote Switch Unit

APPENDIX A.1
QUICK OPERATION CHECK

	LEDs (Main Unit + Remote Unit)	***Buzzer sound***	***Swept tone on 121.5 MHz VHF Radio***
1. ELT switch at **ON** position	4 sec off 1 sec on		On continuously
2. ELT switch at **ARM** position	4 sec on		None
3. ELT switch at **ARM** position for another **25 sec** (Self Test Mode) Self Test takes 25 sec	None NOTE: If the LEDs flash there is a problem. Please refer to "Installation and Operation manual" paragraph 2.4 for details.		
4. ELT switch at **ARM** position. Shake ELT hard Forward and Backward (G Switch Test)	4 sec off 1 sec on		On continuously
5. Press **RESET** button on **Main Unit**	None		
6. Press **ON** button on **Remote Unit**	4 sec off 1 sec on		On continuously
7. Press **RESET** button on **Remote Unit**	None		

Now the ELT switch on the **Main Unit** should be left at **ARM** position and the ELT is ready to go.

Note 1: The ELT switch is "make before break." Return to **OFF** for at least 1 sec before changing positions.

Note 2: Press **RESET** anytime to turn off unwanted transmission.

APPENDIX B

PERIODIC MAINTENANCE CHECK LIST WITH COMPLIANCE CROSS REFERENCES

REQUIREMENTS	TEST PROCEDURE Paragraphs	TEST RESULT	
		PASS	FAIL
FAR 91.207(d); 91.409 and 43 Appendix D. *Transport Canada Civil Aviation Part V Airworthiness Standards Chapter 551.104 (d) (1) (VI)* **Details of approved batteries and sources of supply** (Checks are to be performed every year)	**Approved Batteries**: Main ELT Unit: Ameri-King P/N 4500010 -1 Remote Switch Unit: Duracell DL1/3NB **Source of Supply:** Ameri-King	☐ ☐	☐ ☐
FAR 91.207(d); 91.409 and 43 Appendix D. *Transport Canada Civil Aviation Part V Airworthiness Standards Chapter 551.104 (d) (1) (VI)* **Battery replacement or recharge instructions** (Checks are to be performed every year)	2.5.1 ELT Main Battery Replacement instructions 2.5.2 ELT Remote Unit Battery Replacement instructions 3.4.4 Expiration Date Check **Note**: The Batteries for both Main ELT Unit and Remote Switch Unit are not rechargeable	☐ ☐ ☐	☐ ☐ ☐

FAR 91.207(d); 91.409 and 43 Appendix D. *Transport Canada Civil Aviation Part V Airworthiness Standards Chapter 551.104 (d) (1) (VI)* **Battery capacity test procedures** (Tests are to be performed every year)	2.5.1 ELT Main Battery Replacement instructions, Step 2, Battery Voltage Test.	☐	☐
FAR 91.207(d); 91.409 and 43 Appendix D. *Transport Canada Civil Aviation Part V Airworthiness Standards Chapter 551.104 (d) (1) (VI)* **Functional Test Procedures** These functional test procedures are recommended by Ameri-King to be performed every (1-2) months	3.3.1 Main Switch ON/OFF/ARM Operation: 3.3.2 Transmitter ID Programming and Self-Test 3.3.3 System Integration Test 3.3.4 Green ON Lights and Buzzer Sound Functions 3.3.5 Transmitter Functional Test For ELT-(S) only 3.3.5.1 Main Switch ON / OFF / SELF TEST Operation 3.3.5.2 Transmitter Self-Test	☐ ☐ ☐ ☐ ☐ ☐ ☐	☐ ☐ ☐ ☐ ☐ ☐ ☐
FAR 91.207(d); 91.409 and 43 Appendix D. *Procedures Necessary To Accomplish The Performance Tests Specified In Chapter 571 Appendix G* **(A) Corrosion Inspection** (Inspections are to be performed every year)	3.4.2 Corrosion Inspection For Coaxial Cable 3.4.3 Corrosion Inspection For Remote Wiring Modular Cable	☐ ☐	☐ ☐

(B) Operational Testing *The periodicity of operational checks is at the operator's discretion, but the check shall only be conducted during the first five minutes of any UTC.* These test procedures are recommended by Ameri-King to be performed every (1-2) months	3.4.6 Operational Test 3.4.7.1 G-Switch Check 3.4.7.2 Antenna Check 3.4.8* Verification of Digital Message 3.4.9 Verification of Registration 3.4.10* Verification of ELT/GPS interface (if equipped)	☐ ☐ ☐ ☐ ☐ ☐	☐ ☐ ☐ ☐ ☐ ☐
(C) Performance Testing **These Tests are required for Canadian compliance only** (Tests are to be performed every year)	3.5.1 Regular Periodic Maintenance Test 3.5.2** Power Output Test (20 +/-3) dBm at 121.5 & 243 MHz) (35.34 to 38.18) dBm 5W+/-1.58W at 406.028 MHz) 3.5.3* Frequency Test 121.5 MHz ± 6.075 KHz 243 MHz ± 12.150 KHz 406.028 MHz +/- 1 KHz 3.5.3.4*** Current Draw Tests 3.5.4 Audio Modulation 3.5.5 Transmitter Functional Test 3.5.6 Performance Test Marking and Log Book Entry	☐ ☐ ☐ ☐ ☐ ☐ ☐	☐ ☐ ☐ ☐ ☐ ☐ ☐

(D) Battery Replacement And Recharging (Checks are to be performed every year) **(E) Shipping**	2.5.1 ELT Main Battery Replacement Check 2.5.2 ELT Remote Unit Battery Replacement Check 3.4.4 Expiration Date Check 3.4.5 Battery Leakage Check 3.5.7 Shipping	☐ ☐ ☐ ☐ ☐	☐ ☐ ☐ ☐ ☐
Transport Canada Civil Aviation Part V Airworthiness Standards Chapter 551.104 (d) (1) (VI) **Verify the aircraft 24 bit address** **This Test is required for Canadian compliance only** (Tests are to be performed every year)	3.4.8* Verification of Digital Message 3.4.10.4* 24-Bit Address Maintenance Test	☐ ☐	☐ ☐

* **Test Equipment: Test Set TS-451 or equivalent**
** **Test Equipment: Spectrum Analyzer or equivalent**
*** **Test Equipment: DC Current Meter or equivalent**

APPENDIX C

EMERGENCY LOCATOR TRANSMITTER RECOMMENDED SUPPLEMENTAL INSPECTION PROCEDURE (FAR PART 91 OPERATIONS)

FAR Part 91.207 Paragraph (d); Part 43 Appendix D (i); FAR Part 91.407
14 CFR Parts 25, and 29 [Docket No. 26180; Amendment Nos. 25-82, 29-33]
FAA ACTION NOTICE A 8150.3

FAA Part 91.207

(d) Each emergency locator transmitter required by paragraph (a) of this section must be inspected within 12 calendar months after the last inspection for—
(1) Proper installation;
(2) Battery corrosion;
(3) Operation of the controls and crash sensor; and
(4) The presence of a sufficient signal radiated from its antenna.

INSPECTION
(d) Each emergency locator transmitter must be inspected within 12 calendar months after the last inspection for -

INSPECTION
(1) Proper installation;
According to the ELT mfg instructions and
According to FAA supplemental inspection procedures in Notice A8310.1
According to AC91-44A

INSPECTION
- Remove all interconnections to the ELT unit and ELT antenna. Visually inspect and confirm proper seating of all connector pins. Special attention should be given to coaxial center conductor pins which are prone to retracting into the connector housing.
- Remove the ELT from the mount and inspect the mounting hardware. All required mounting hardware should be installed and secured.

INSPECTION
(2) Battery corrosion;
Gain access to the ELT battery and inspect. No corrosion should be detectable. Verify the ELT battery is approved and check its expiration date.

INSPECTION
(3) Operation of the controls and crash sensor; and Activate the ELT using an applied force. Consult the ELT manufacturer's instructions before activation. The direction for mounting and force activation is indicated on the ELT.

INSPECTION
A TSO-C91 ELT can be activated by using a quick rap with the palm. A TSO-C91a ELT can be activated by using a rapid forward (throwing) motion coupled by a rapid reversing action.

INSPECTION
Verify that the ELT is activated using a wattmeter, the airplane's VHF radio communications receiver tuned to 121.5 MHz, or other means.

INSPECTION
Reinstall the ELT into its mount and verify the proper direction for crash activation. Reconnect all cables. They should have some slack at each end and should be properly secured to the airplane structure for support and protection.

INSPECTION
(4) The presence of a sufficient signal radiated from its antenna Activate the ELT using the "on" or ELT "test" switch. A low-quality amplitude modulation (AM) broadcast radio receiver should be used to determine if energy is being transmitted from the antenna. (continue)

INSPECTION
When the antenna of the AM broadcast radio receiver (tuning dial on any setting) is held about 6 inches from the activated ELT antenna, the ELT aural tone will be heard.

INSPECTION
Verify that all switches are properly labeled and positioned.

TEMPORARY REMOVAL
An aircraft [may be operated] during any period for which the transmitter has been temporarily removed for inspection, repair, modification, or replacement, subject to the following:

TEMPORARY REMOVAL
No person may operate the aircraft unless the aircraft records contain an entry which includes the date of initial removal, the make, model, serial number, and reason for removing the transmitter, and a placard located in view of the pilot to show "ELT not installed."

TEMPORARY REMOVAL
No person may operate the aircraft more than 90 days after the ELT is initially removed from the aircraft

FAA Part 43 Appendix D

(i) Each person performing an annual or 100-hour inspection shall inspect (where applicable) the following components of the radio group:
(1) Radio and electronic equipment--for improper installation and insecure mounting.

(2) Wiring and conduits--for improper routing, insecure mounting, and obvious defects.
(3) Bonding and shielding--for improper installation and poor condition.
(4) Antenna including trailing antenna--for poor condition, insecure mounting, and improper operation.

Sec. 91.407

Operation after maintenance, preventive maintenance, rebuilding, or alteration

(a) No person may operate any aircraft that has undergone maintenance, preventive maintenance, rebuilding, or alteration unless--
(1) It has been approved for return to service by a person authorized under Sec. 43.7 of this chapter; and
(2) The maintenance record entry required by Sec. 43.9 or Sec. 43.11, as applicable, of this chapter has been made.

(b) No person may carry any person (other than crewmembers) in an aircraft that has been maintained, rebuilt, or altered in a manner that may have appreciably changed its flight characteristics or substantially affected its operation in flight until an appropriately rated pilot with at least a private pilot certificate flies the aircraft, makes an operational check of the maintenance performed or alteration made, and logs the flight in the aircraft records.

(c) The aircraft does not have to be flown as required by paragraph (b) of this section if, prior to flight, ground tests, inspection, or both show conclusively that the maintenance, preventive maintenance, rebuilding, or alteration has not appreciably changed the flight characteristics or substantially affected the flight operation of the aircraft.

FAA Action Notice A 8150.3

1. Remove all interconnections to the ELT Main Unit and ELT antenna. Visually inspect and confirm proper seating of all connector pins. Special attention should be given to coaxial center conductor pins, which are prone to retracting into the connector housing.
2. Remove ELT from the mount and inspect the mounting hardware. All required mounting hardware should be reinstalled and secured.
3. Gain access to the ELT battery and inspect. No corrosion should be detectable. Verify that the ELT battery is approved and check its expiration date.
4. Activate the ELT using applied force. The direction for mounting and force activation is indicated on the ELT. A TSO-C91a ELT can be activated by using a quick rap with the palm. A TSO-C91a ELT can be activated by using a rapid forward (throwing) motion coupled by a rapid reversing action. Manufacturer's instructions should be referred to prior to activation. Verify that the ELT has been activated by use of a Wattmeter, the airplane's VHFG Radio Communications Receiver when tuned to 121.5 MHz, or other means. (See Note 1).
5. Reinstall the ELT into its mount and verify the proper direction for crash activation. Reconnect all cables. They should have some slack at each end be properly secured to the Airplane structure for support and protection.

6. Activate the ELT using the "ON" of "Test" Switch. A low quality AM Broadcast Radio Receiver should be sued to determine if energy is being transmitted from the Antenna. When the Antenna of this Radio (tuning dial on any setting) is held about 6 inches from the activated ELT Antenna, the ELT Aural tone will be heard (see notes 2 and 3).
7. Verify that all switches are properly labeled and positioned.

Note 1:

This is not a measured check. It only indicates that the G-Switch is working.

Note 2:

This is not a measured check, but it does provide confidence that the Antenna is radiating with sufficient power to aid search and rescue. The Aircraft's VHF Receiver, tuned to 121.5 MHz, may also be sued. This Receiver, however, is more sensitive and could pick up a weak signal even if the radiating ELT's Antenna is disconnected. Thus, it does not check the integrity of the ELT System or provide the same level of confidence, as does an AM Radio.

Note 3:

Because the ELT radiates on the emergency frequency, the Federal Communications Commission allows these tests to be conducted only within the first 5 minutes after any hour and limits the tests to 3 sweeps of the Transmitter Audio Modulation.

APPENDIX D

EXCERPT FROM FAA AC 91-44A PARAGRAPH 8.A WHICH DEFINES WHEN BATTERY REPLACEMENT MAY BE DONE UNDER FAR 43.3 (H) AS PREVENTIVE MAINENANCE

"… The pilot can do the replacement if the preventive maintenance limitations of Part 43.3 (h) of the FAR are complied with. For example, a portable type ELT that is readily accessible and can be removed and reinstalled in the Aircraft by a simple operation should be considered Preventive Maintenance. Fixed type ELT installations are often permanently mounted in a remote area of the Aircraft near flight control cables, vital Aircraft components and critical attachments to the Aircraft structures. Installations of this nature require an external Antenna and often a remote ON / OFF transmitter control switch that is usually located near the pilot's flight position. This type installation is complex and battery replacement should be accomplished by a Certificated Mechanic or Certificated Repair Station … "

APPENDIX E
FAA ADVISORY CIRCULAR AC43.13-2B, SECTION 303

a. The antenna's structural load, plus any required allowances, may not exceed the design capacity of the structure intended to support it. It is important to understand the operational characteristics of the aircraft and consider forces that occur during flight (dynamic loading) as well as those that occur when the aircraft is not in motion (static loading). For example, an aircraft designed without flaps may employ a side slip procedure to lose altitude, during which the direction of airflow across the fuselage is not in line with the aircraft longitudinal axis. Antenna mountings on these aircraft need to be designed and evaluated for the direction of airflow that occurs during such an operation.

b. Whenever possible, an antenna should be mounted to a flat surface. Minor aircraft skin curvature can be accommodated with the use of an appropriate gasket but if gaps over 0.020" appear between the base plate and mounting surface, use of a mounting saddle is recommended.

c. Since antenna systems typically require a ground plane (this may be a conductive surface that the antenna mounts to) any separation of an antenna from its ground plane may impact performance. Contact the manufacturer for recommendations if a gasket or mounting saddle is needed (see figure below).

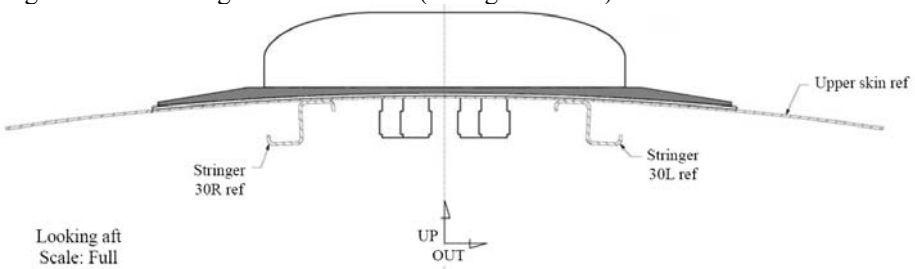

d. Mounting screws must never be over torqued in an attempt to distort aircraft structure to reduce gaps between the antenna base plate and aircraft-mounting surface.

e. Consider the factors of flutter, vibration characteristics, and drag load. The approximate drag load an antenna develops may be determined by the formula:

$$D=0.000327\ AV^2$$

(The formula includes a 90% reduction factor for the streamline shape of the antenna.)

D is the drag load on the antenna in lbs.
A is the frontal area of the antenna in sq. ft.
V is the V_{NE} of the aircraft in mph.

<u>Example:</u> Antenna manufacturer specification frontal area = 0.135 sq. ft. and V_{NE} of aircraft is 250 mph.

$$D=0.000327 \times .135 \times (250)^2$$
$$=0.000327 \times .135 \times 62{,}500$$
$$= 2.75 \text{ lbs}$$

f. The above formula may be adapted to determine side load forces by substitution of the apparent frontal area value for A, when the aircraft motion and antenna orientation are not the same.

APPENDIX F
REGISTERING A 406 MHz BEACON IN THE U.S.A.

Important Notice - Please Read Before Completing Registration

Registration is an important facet for all Cospas-Sarsat 406 MHz emergency beacons. Not only is it required by Federal Regulations but the information you furnish is used by Search And Rescue (SAR) agencies in the event of beacon activation. The registration information is an important tool to assist the United States Coast Guard, United States Air Force, and other SAR agencies in locating and quickly responding to you, your vessel, or your aircraft. Failure to register your beacon may delay a rescue response. Accurate, up-to-date registration information will also be used to conserve resources by helping to eliminate false alert deployments, as an inadvertent activation can be resolved with a phone call.

There is no charge for beacon registration. This is a service provided by the U.S. National Oceanic and Atmospheric Administration (NOAA).

All online registrations will be entered into the National 406 MHz Beacon Registration Database on the same day of entry. Registration forms received via postal mail will be entered within 2 business days of receipt. For online registrations, a confirmation letter with your completed registration information form will be sent immediately via e-mail or fax (if provided). Confirmation letters sent via postal mail should arrive within two weeks. Once your registration confirmation is received, please review all information. Any changes or updates to your registration information can be done via the internet, fax, e-mail or postal mail. If you do not receive your registration confirmation from NOAA on the same day you submit it over the internet or within two weeks if you submit it by postal mail, please call NOAA toll-free at: 1-888-212-SAVE (7283) or 301-817-4515 for assistance.

After initial registration (or re-registration) you will receive a NOAA Proof of Registration Decal by postal mail. This decal is to be affixed to the beacon and should be placed in such a way that it is clearly visible. If for some reason you do not receive the registration decal within two weeks, please-6 call NOAA toll-free at: 1-888-212-SAVE (7283) or 301-817-4515.

Failure to register, re-register (as required every two years), or to notify NOAA of any changes to the status of your 406 MHz beacon could result in penalties and/or fines being issued under Federal Law. The owner or user of the beacon is required to notify NOAA of any changes to the registration information at any time. By submitting this registration the owner, operator, or legally authorized agent declares under penalty of law that all information in the registration information is true, accurate, and complete. Providing information that is knowingly false or inaccurate may be punishable under Federal Statutes. Solicitation of this information is authorized by Title 47 - Parts 80, 87, and 95 of the U.S. Code of Federal Regulations (CFR). Additional registration forms can be found on the NOAA-SARSAT website:

www.sarsat.noaa.gov or
www.beaconregistration.noaa.gov.

Please note, NOAA will complement or update your registration information accordingly if your registration has expired and credible information is provided from SAR sources. NOAA will also seek information from other databases to update and/or complement the existing information for an expired beacon registration. Although the information provided will become a matter of public record, there is no intent to circulate beyond its intended purpose, i.e., to assist SAR agencies in carrying out their mission. Public reporting burden for the collection of this information is estimated to average 15 minutes per response, including the time for reviewing instructions, searching existing data sources, and completing and reviewing the collection of information. Comments regarding this burden or any other aspect of this collection of information, including suggestions for reducing this burden should be sent to:

NOAA/SARSAT
NSOF, E/SP3
4231 Suitland Road
Suitland, MD 20746

Or call: 1-888-212-SAVE (7283) or 301-817-4515

Finally, false alerts remain a chief concern for SAR agencies. We ask that you carefully refer to the beacon's user manual for instructions on properly operating, installing, testing, performing required maintenance, and/or stowage of your beacon. We find that these are important factors in reducing the number of false alerts. Please use the utmost care at all times!

Save Time! Register your beacon online at: www.beaconregistration.noaa.gov

Official 406 MHz ELT Registration Form

Mail or Fax to:
NOAA/SARSAT
NSOF, E/SP3
4231 Suitland Road
Suitland, MD 20746
Fax No. 301-817-4565

ELT Information

Beacon ID (Unique Identifier Number)
(15 digit character ID provided by ELT manufacturer)

ELT Manufacturer _____ Model No. _____

ELT Registration

☐ New ELT Registration
☐ Renewal of ELT Registration
☐ Change of ELT Information or Ownership
☐ Replacement of ELT Decal
☐ Check here if this ELT is a replacement for a previously registered ELT.
Please enter the old ELT unique ID number _____

Owner/Operator Information

Name _____ (Last, First, Middle Initial)
Mailing Address _____
City _____ State/Province _____
ZIP (Postal) Code _____ Country _____

E-mail _____
Telephone
( ) _____ ☐ Home ☐ Work ☐ Cellular ☐ Fax ☐ Other (Area Code)
( ) _____ ☐ Home ☐ Work ☐ Cellular ☐ Fax ☐ Other (Area Code)
( ) _____ ☐ Home ☐ Work ☐ Cellular ☐ Fax ☐ Other (Area Code)
( ) _____ ☐ Home ☐ Work ☐ Cellular ☐ Fax ☐ Other (Area Code)

Aircraft Information

Registration (Tail) Number _____

Usage
☐ Commercial ☐ Non-commercial
☐ Government Military ☐ Government Non-military

Type
☐ Single-engine Propeller ☐ Single-engine Jet ☐ Multi-engine Propeller
☐ Multi-engine Jet ☐ Helicopter ☐ Other _____

Aircraft Manufacturer _____
Model _____ Color _____
Seating Capacity _____

Radio Equipment (Check all that apply)
☐ VHF ☐ MF ☐ HF ☐ SSB ☐ Other _____

Survival Equipment
Deployable _____ (Describe and List Quantity)
Fixed _____ (Describe and List Quantity)

Principal Airport _____
_____ (City) _____ (State)

Additional Data _____

Emergency Contact Information *(Please indicate someone other than the owner)*

Name of **Primary** 24-Hour Emergency Contact:
_____
Telephone
( ) _____ ☐ Home ☐ Work ☐ Cellular ☐ Fax ☐ Other (Area Code)
( ) _____ ☐ Home ☐ Work ☐ Cellular ☐ Fax ☐ Other (Area Code)
( ) _____ ☐ Home ☐ Work ☐ Cellular ☐ Fax ☐ Other (Area Code)
( ) _____ ☐ Home ☐ Work ☐ Cellular ☐ Fax ☐ Other (Area Code)

Name of **Alternate** 24-Hour Emergency Contact:
JANIS
Telephone
( ) _____ ☐ Home ☐ Work ☐ Cellular ☐ Fax ☐ Other (Area Code)
( ) _____ ☐ Home ☐ Work ☐ Cellular ☐ Fax ☐ Other (Area Code)
( ) _____ ☐ Home ☐ Work ☐ Cellular ☐ Fax ☐ Other (Area Code)
( ) _____ ☐ Home ☐ Work ☐ Cellular ☐ Fax ☐ Other (Area Code)

Signature _____ Date _____

If you have any questions about this form or with ELT registration in general, please call 1-888-212-SAVE (7283) or 301-817-4515.
For information on the U.S. Search & Rescue Satellite-Aided Tracking system, please visit: www.sarsat.noaa.gov

OMB Auth. (0648-0295) Expires: 31JAN2008

APPENDIX G

International 406 MHz Beacon Registration Database (IBRD)
Countries Allowing Individual Registration

Website: www.cospas-sarsat.com
Path to this page: English →Beacons→ Beacon registration

COSPAS SARSAT

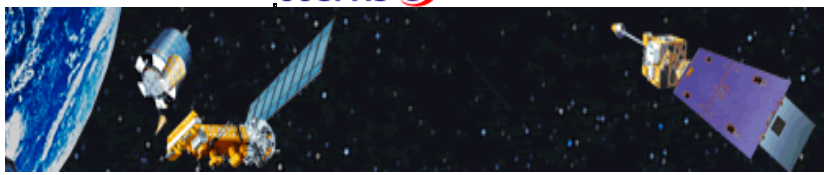

Home Description Status Beacons Documentation Management

Registering a 406 MHz Beacon

Register a beacon in the IBRD
FAQs about beacon registration
Countries allowing individual registration in the IBRD
SAR Service Access to the IBRD
Account and password request template
User Guides

It is crucial that 406 MHz distress beacons be registered in recognized beacon registration databases which will be accessible to search and rescue authorities at all times. The information contained in these databases concerning the beacon, its owner, and the vehicle/vessel on which the beacon is mounted is vital for the effective use of Search and Rescue resources. The proper registration of a beacon could make the difference between success and failure of a search and rescue mission. Click here for examples of how the registration information may be used to enable the proper SAR response.

Process for Registering a Beacon - If the Administration has identified a Registration Point of Contact

Contact the representative in your country responsible for 406 MHz distress beacons to:

- Obtain guidance regarding national regulations concerning beacon coding and registration (it should be noted that there are many beacon message protocols which are compatible with the Cospas-Sarsat System; it is the responsibility of National Administrations to select the protocols for use within their jurisdiction); and
- Obtain the necessary forms to register the beacon.

Process for Registering a Beacon in the Cospas-Sarsat International 406 MHz Beacon Registration Database (IBRD)

Your country may have elected to allow you to directly register your beacon in the International 406 MHz Beacon Registration Database (IBRD), available online at www.406registration.com. Click here for a list of these countries.
The IBRD became operational on the 16 January 2006. It provides capability to register 406 MHz distress beacons and has extensive online help capabilities.
Individual beacon owners may register their beacons and select their own passwords during the registration process if this use of the IBRD has been allowed by their national Administration.

You will need the following information to register a beacon:

- Beacon Hexadecimal Identification (15 Hexadecimal characters)
- Owner name and phone number
- Emergency contact name and phone number
- Vehicle type (selectable from a menu)
- Vehicle name, MMSI, call sign or identification number (except for PLBs).

Cospas-Sarsat will only accept beacon registrations submitted via the online facilities of the IBRD. Beacon registrations submitted in paper format or via other communication facilities will not be accepted. The Cospas-Sarsat Secretariat (mail@cospas-sarsat.int) is available to answer questions from National Administrations concerning beacon coding and registration matters.

Administration User Accounts
The IBRD is freely available to users with no access to national registration facilities and to Administrations who wish to avail themselves of the facility to make their national beacon registration data more available to SAR services.
SAR Services and others wishing to query the IBRD will require passwords issued by the Cospas-Sarsat Secretariat. In order to acquire appropriate passwords to access the IBRD, National Administrations should:

- Designate a National IBRD Point of Contact, and
- Request that the Cospas-Sarsat Secretariat allocate user identifications and passwords to their National IBRD Point of Contact.

The password and user identification request must be provided in writing to the Database Administrator (i.e. the Cospas-Sarsat Secretariat) and must carry the signature of the Cospas-Sarsat/IMO/ICAO Representative of the Administration. For a letter template, please click here.

[Contact Us | Related Sites | Location]

700 de la Gauchetière West, Suite 2450, Montreal (Quebec) H3B 5M2 Canada

Email: mail@cospas-sarsat.int Tel: +1 514 954 6761

Sorted By Country Name		Sorted By Country Code	
Country Code	Country Name	Country Code	Country Name
401	Afghanistan	201	Albania
201	Albania	202	Andorra
202	Andorra	204	Azores
301	Anguilla	206	Belarus
216	Armenia	208	Vatican
608	Ascension	214	Moldova
204	Azores	216	Armenia
408	Bahrain	243	Hungary
405	Bangladesh	255	Madeira
314	Barbados	262	Montenegro
206	Belarus	268	San Marino
312	Belize	270	Czech Republic
610	Benin	274	Macedonia
410	Bhutan	278	Slovenia
720	Bolivia	301	Anguilla
611	Botswana	312	Belize
508	Brunei	314	Barbados
633	Burkina Faso	319	Cayman Islands
506	Burma	323	Cuba
609	Burundi	325	Dominica
364	Turks And Caicos Islands	327	Dominican Republic
514, 515	Cambodia	330	Grenada
617	Cape Verde	332	Guatemala
319	Cayman Islands	336	Haiti
612	Central African Republic	339	Jamaica
670	Chad	341	St Kitts
616	Comoros	343	St Lucia
615	Congo	348	Montserrat
323	Cuba	350	Nicaragua
270	Czech Republic	351, 352, 353, 354, 355, 356, 357, 371, 372	Panama
621	Djibouti	359	El Salvador
325	Dominica	362	Trinidad
327	Dominican Republic	364	Turks And Caicos Islands
359	El Salvador	378	British Virgin Islands
631	Equatorial Guinea	401	Afghanistan
625	Eritrea	405	Bangladesh
624	Ethiopia	408	Bahrain
740	Falkland Islands	410	Bhutan

626	Gabon Republic	417	Sri Lanka
629	Gambia	422	Iran
627	Ghana	425	Iraq
330	Grenada	428	Israel
332	Guatemala	434	Turkmenistan
632	Guinea	436	Kazakhstan
630	Guinea-Bissau	437	Uzbekistan
750	Guyana	438	Jordan
336	Haiti	443	Palestinian Authority
243	Hungary	445	Korea North
422	Iran	447	Kuwait
425	Iraq	450	Lebanon
428	Israel	451	Kyrgyz Republic
619	Ivory Coast	453	Macao
339	Jamaica	457	Mongolia
438	Jordan	459	Nepal
436	Kazakhstan	461	Oman
634	Kenya	466	Qatar
529	Kiribati	468	Syria
445	Korea, North	470	United Arab Emirates
447	Kuwait	473, 475	Yemen
451	Kyrgyz Republic	506	Burma
531	Lao	508	Brunei
450	Lebanon	510	Micronesia
644	Lesotho	511	Palau
642	Libya	514, 515	Cambodia
453	Macao	529	Kiribati
274	Macedonia	531	Lao
255	Madeira	544	Nauru
655	Malawi	555	Pitcairn Island
649	Mali	557	Solomon Islands
654	Mauritania	574	Vietnam
645	Mauritius	608	Ascension
510	Micronesia	609	Burundi
214	Moldova	610	Benin
457	Mongolia	611	Botswana
262	Montenegro	612	Central African Republic
348	Montserrat	615	Congo
544	Nauru	616	Comoros
459	Nepal	617	Cape Verde
350	Nicaragua	619	Ivory Coast
656	Niger	621	Djibouti
461	Oman	624	Ethiopia
511	Palau	625	Eritrea
443	Palestinian	626	Gabon Republic

	Authority		
351, 352, 353, 354, 355, 356, 357, 371, 372	Panama	627	Ghana
555	Pitcairn Island	629	Gambia
466	Qatar	630	Guinea-Bissau
661	Rwanda	631	Equatorial Guinea
268	San Marino	632	Guinea
668	Sao Tome	633	Burkina Faso
663	Senegal	634	Kenya
667	Sierra Leo	642	Libya
278	Slovenia	644	Lesotho
557	Solomon Islands	645	Mauritius
666	Somali	649	Mali
417	Sri Lanka	654	Mauritania
665	St Helena	655	Malawi
341	St Kitts	656	Niger
343	St Lucia	661	Rwanda
662	Sudan	662	Sudan
669	Swaziland	663	Senegal
468	Syria	665	St Helena
674, 677	Tanzania	666	Somali
671	Togo	667	Sierra Leo
362	Trinidad	668	Sao Tome
434	Turkmenistan	669	Swaziland
470	United Arab Emirates	670	Chad
675	Uganda	671	Togo
437	Uzbekistan	674, 677	Tanzania
208	Vatican	675	Uganda
775	Venezuela	676	Zaire
574	Vietnam	678	Zambia
378	British Virgin Islands	679	Zimbabwe
473, 475	Yemen	720	Bolivia
676	Zaire	740	Falkland Islands
678	Zambia	750	Guyana
679	Zimbabwe	775	Venezuela

APPENDIX H

ELT CODING PROGRAMMING, ID READER AND MAINTENANCE TEST, P/N TS-451

Important Note: These tests should be performed only within an RF Screen Room or Facility providing shielding of RF Emissions.

1. **Setup**
   Use provided cable to connect the ELT (RJ-12 port) to the mini PC (USB port)

2. **ELT Coding Programming**

   2.1 Double-Click "AK451" Icon to run the program. The programming window appears as below:

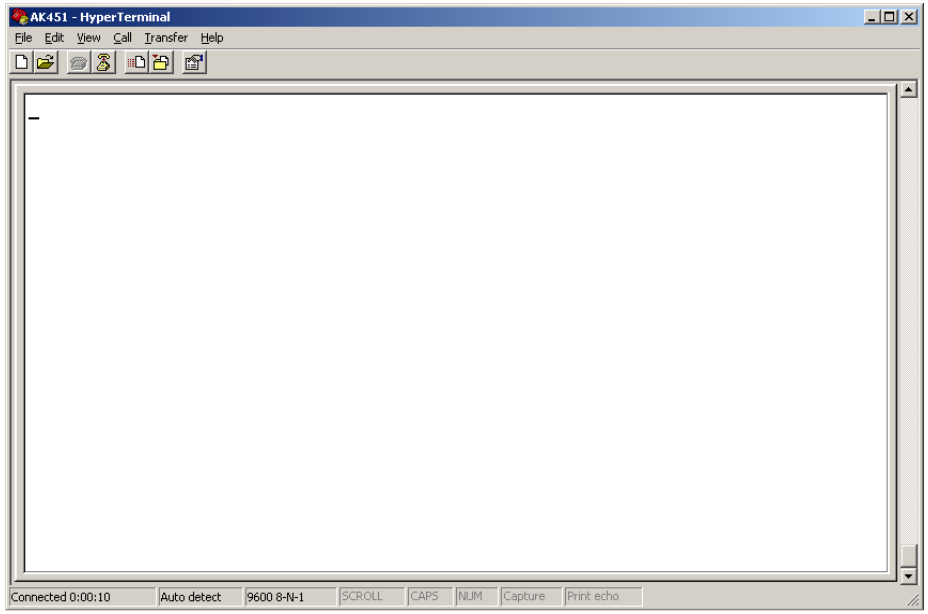

Figure 1

Note: If you don't see the window above, you may try the other USB port.

2.2 Set the ELT main switch to "**ARM**" position.
2.3 Verify the LED 'ON' light illuminates for 4 seconds.
2.4 At the ":>_" prompt, type: cn **Password** command then press "Enter" to go to main menu. Must type this command within next 20 seconds after the command prompt appears.

Note 1: Please contact Ameri-King for **Password**, via Email or fax or call.

Note 2: If there is no programming command input in this time window, the ELT will enter the Self-Test mode, and you cannot program the ELT. In this case, set the ELT switch to "**OFF**" position and start again from step 2.2.

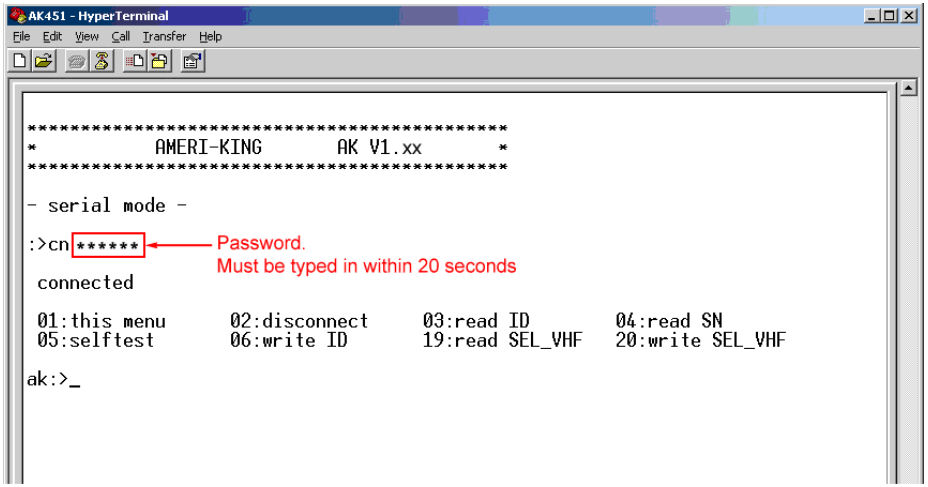

Figure 2

2.5 To program ELT: Use command " **06** "
Important Instructions: Please provide the following information via Email or fax or call Ameri-King, in order to obtain 22 Hex Digit ID:

- Country
- Protocol required (See Table 1 for List of all available Protocols)
- 24 Bit aircraft address, if applicable

Ameri-King shall then provide 22 Hex Digit ID (Short Message) or 30 Hex Digit ID (Long Message) accordingly.

- The "**06**" command syntax :

  06 –s (-1/-22/-30) 123456789ABCDEF (0..F)

- To program 22 Hex Digits ID to the ELT: (Short Messages)
  At the command prompt type:

  06 -22 XXXXXXXXXXXXXXXXXXXXXX

  (Where X..X = 22 HEX Digits ID.) (**See Figure 3**)

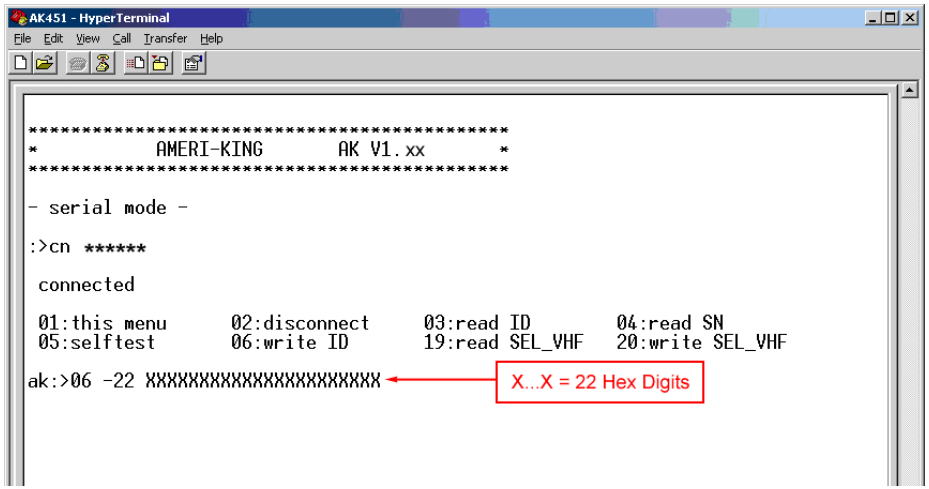

Figure 3

- To program 30 Hex ID to the ELT: (Long Messages)
  At the command prompt type:

  06 -30 XXXXXXXXXXXXXXXXXXXXXXXX

  (Where X..X = 30 HEX Digits ID.) (**See Figure 4**)

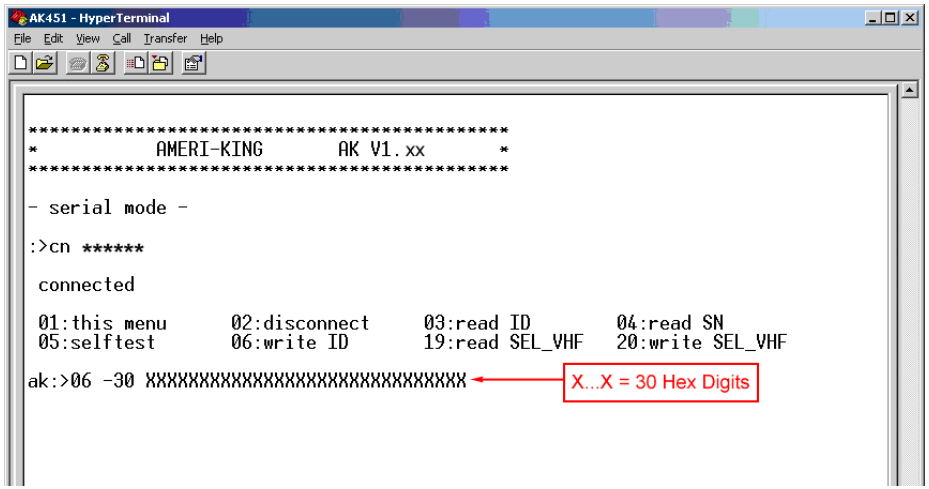

Figure 4

Example: To program 30 Hex ID to the ELT: (Long Messages), at the command prompt type:

06 -30 97142CC1637FDFF9996CF583E0FAA8

A screen as shown in figure 5 below should appear, indicating that the program is a success.

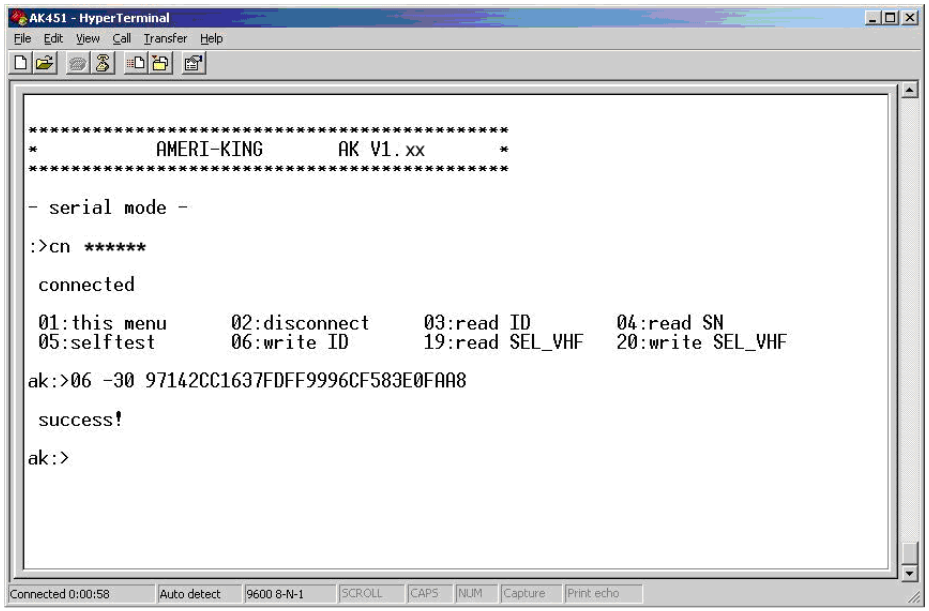

Figure 5

Table 1. List of all available Protocols

ELT Non-Location Protocols

Serial User Protocol (coding ELTs with the beacon serial number)

Bits 1 - 24	25	26	27-----36	37---39	40----42	43	44---63	64---73	74------83	84----------85	86--106	107	108	109-------112
Bit and Frame Synch	0	1	Country Code	0 1 1	0 0 0	C	Serial Number (20 Bits)	All "0" or National Use	C/S Cert # or Nat use	Auxiliary Radiolocating Device	21 Bit BCH	Emerg Flag	Act Code	Emerg Code or National Use

Serial User Protocol (coding ELTs with aircraft operator designator and a serial number)

Bits 1 - 24	25	26	27-----36	37---39	40----42	43	44---61	62---73	74------83	84----------85	86--106	107	108	109-------112
Bit and Frame Synch	0	1	Country Code	0 1 1	0 0 1	C	Operator 3-letter Code	Serial Number	C/S Cert # or Nat use	Auxiliary Radiolocating Device	21 Bit BCH	Emerg Flag	Act Code	Emerg Code or National Use

Serial User Protocol (coding ELTs with Aircraft 24-bit Address)

Bits 1 - 24	25	26	27-----36	37---39	40----42	43	44---67	68---73	74------83	84----------85	86--106	107	108	109-------112
Bit and Frame Synch	0	1	Country Code	0 1 1	0 1 1	C	24-bit Aircraft Address	Add ELT Number	C/S Cert # or Nat use	Auxiliary Radiolocating Device	21 Bit BCH	Emerg Flag	Act Code	Emerg Code or National Use

Aviation User Protocol

Bits 1 - 24	25	26	27------36	37-----39	40----------81	82	83	84----------85	86--106	107	108	109----------112
Bit and Frame Synch	0	1	Country Code	0 0 1	Aircraft Registration Marking (42 bits)	0	0	Auxiliary Radiolocating Device	21 Bit BCH	Emerg Flag	Act Code	Emerg Code or National Use

ELT Location Protocols — User Location Protocols

User Location Protocol (coding ELTs with the beacon serial number)

Bits 1 - 24	25	26	27----36	37--39	40--42	43	44---63	64--73	74----83	84-------85	86--106	107	108-----132	133--144
Bit and Frame Synch	1	1	Country Code	0 1 1	0 0 0	C	Serial Number (20 Bits)	All "0" or National Use	C/S Cert # or Nat use	Auxiliary Radiolocating Device	21 Bit BCH	Position Data Source	Position Data	12 Bit BCH

User Location Protocol (coding ELTs with aircraft operator designator and a serial number)

Bits 1 - 24	25	26	27-----36	37---39	40----42	43	44---61	62---73	74------83	84----------85	86--106	107	108--132	133--144
Bit and Frame Synch	1	1	Country Code	0 1 1	0 0 1	C	Operator 3-letter Code	Serial Number	C/S Cert # or Nat use	Auxiliary Radiolocating Device	21 Bit BCH	Position Data Source	Position Data	12 Bit BCH

User Location Protocol (coding ELTs with Aircraft 24-bit Address)

Bits 1 - 24	25	26	27-----36	37---39	40----42	43	44---67	68---73	74------83	84----------85	86--106	107	108--132	133-144
Bit and Frame Synch	1	1	Country Code	0 1 1	0 1 1	C	24-bit Aircraft Address	Add ELT Number	C/S Cert # or Nat use	Auxiliary Radiolocating Device	21 Bit BCH	Position Data Source	Position Data	12 Bit BCH

User Location Protocol (coding ELT with Aircraft Nationality and Registration Marking)

Bits 1 - 24	25	26	27------36	37-----39	40----------81	82	83	84----------85	86--106	107	108 -- 132	133--144
Bit and Frame Synch	1	1	Country Code	0 0 1	Aircraft Registration Marking (42 bits)	0	0	Auxiliary Radiolocating Device	21 Bit BCH	Position Data Source	Position Data	12 Bit BCH

ELT Location Protocols

Standard Location Protocols

Standard Location Protocol (coding ELTs with 24-bit Aircraft Address)

Bits 1 - 24	25	26	27-----36	37----40	41---------64	65----------85	86--106	107 - 110	111	112	113----------132	133---144
Bit and Frame Synch	1	0	Country Code	0 0 1 1	24-bit Aircraft Address	Position Data to 15 min Resolution	21 Bit BCH	1 1 0 1	Data Source	Auxiliary Radiolocating Device	Position Data to 4 sec Resolution	12 Bit BCH

Standard Location Protocol (coding ELTs with Type Approval Number and a Serial Number)

Bits 1 - 24	25	26	27----36	37----40	41----50	51----64	65----------85	86--106	107 - 110	111	112	113----------132	133---144
Bit and Frame Synch	1	0	Country Code	0 1 0 0	TAC Number	Serial Number	Position Data to 15 min Resolution	21 Bit BCH	1 1 0 1	Data Source	Auxiliary Radiolocating Device	Position Data to 4 sec Resolution	12 Bit BCH

Standard Location Protocol (coding ELTs with Aircraft Operator Designator and a Serial Number)

Bits 1 - 24	25	26	27----36	37----40	41----55	56----64	65----------85	86--106	107 - 110	111	112	113----------132	133---144
Bit and Frame Synch	1	0	Country Code	0 1 0 1	Air Op Desig-nator	Serial Number	Position Data to 15 min Resolution	21 Bit BCH	1 1 0 1	Data Source	Auxiliary Radiolocating Device	Position Data to 4 sec Resolution	12 Bit BCH

National Location Protocols

National Location Protocol (Coding for ELTs)

Bits 1 - 24	25	26	27-----36	37----40	41---------58	59----------85	86--106	107 - 109	110	111	112	113-------126	127-132	133 -144
Bit and Frame Synch	1	0	Country Code	1 0 0 0	Identification Data	Position Data to 2 min Resolution	21 Bit BCH	1 1 0	Data Flag	Data Source	Aux Radloc Device	Position Data to 4 sec Resolution	National Use	12 Bit BCH

http://www.cospas-sarsat.org/BeaconsTutorial/tutorial_map.htm

3. ELT Maintenance Self-Test:

To perform ELT Maintenance Self-Test: Use command **“ 05 ”**

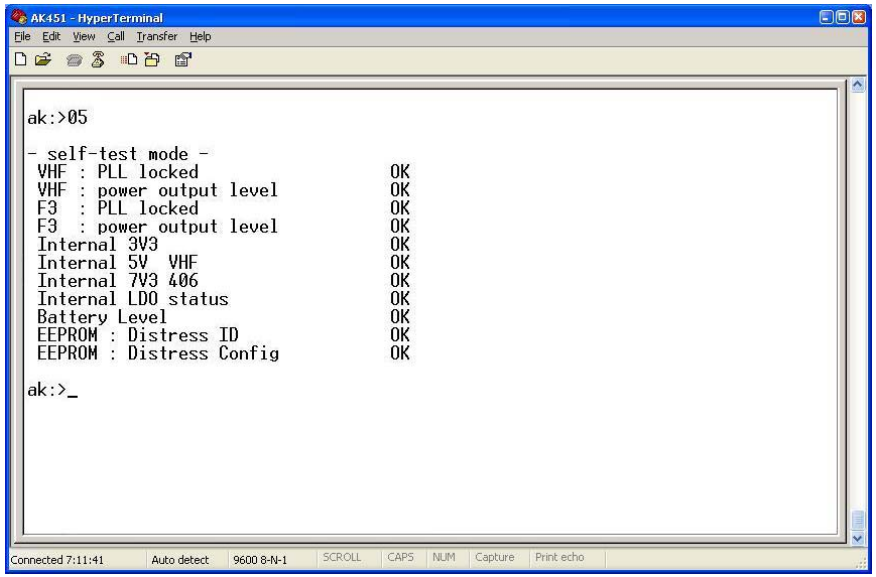

Figure 6: Maintenance Self-Test

Maintenance Test includes the following tests:

VHF: PLL locked PLL locked in F3 or F1 or F2 at fault (9 flashes)
VHF: Power output level F1/F2 VHF RF power level < 17 dBm @ 121.5/243 MHz (7 flashes)
F3: PLL locked PLL locked in F3 or F1 or F2 at fault (9 flashes)
F3: Power output level F3 RF power level < 33 dBm @ 406.028 MHz (5 flashes)
Internal 3V3 Vcc supplies for F3, F2, or F1 at fault (4 flashes)
Internal 5V VHF Vcc supplies for F3, F2, or F1 at fault (4 flashes)
Internal 7V3 406 Vcc supplies for F3, F2, or F1 at fault (4 flashes)
Internal LDO status Internal Data stored in Memory at fault (1 flash)
Battery level Battery voltage is low < Useful Life Battery Voltage setting (3 flashes)
EEPROM: Distress ID stored in Memory at fault (2 flashes)
EEPROM: Distress config stored in Memory at fault (2 flashes)

Test results will display as follows:

OK: Tests pass
KO: Tests fail

4. Functional Test, GPS Position Coordinates Simulation: (Ref.: E6557-CS Annex-E, Page 7) (Table F-D-2)

In this example, the "Ameri-King GPS Location" file is on the desktop which contains the coordinate of a location.
Note: You can use Notepad Editor Program to modify the coordinate of this location.

Ameri-King GPS Location Text file:

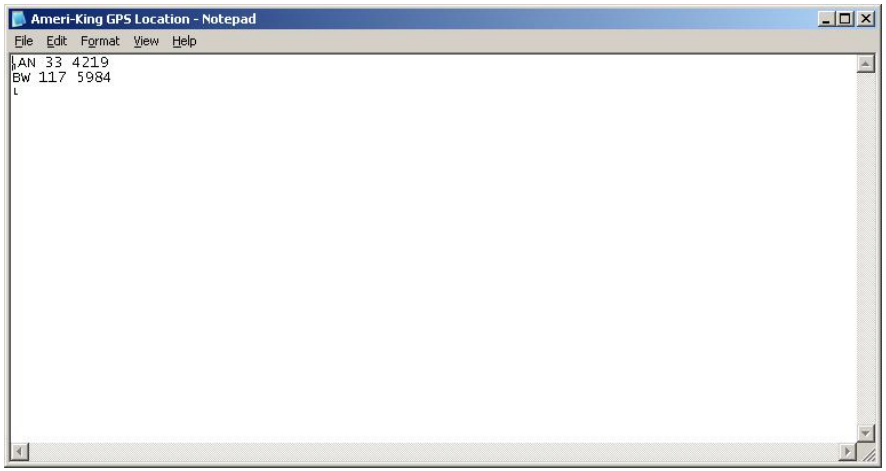

Figure 7

Below are the steps of inserting location coordinate:

IMPORTANT NOTE:
ONCE THE HEX DIGITS APPEAR ON THE SCREEN, TURN THE UNIT OFF IMMEDIATELY! FAILURE TO DO SO WILL RESULT IN THE SIGNAL TO NOTIFY THE EMERGENCY RESCUE AUTHORITIES.

1. Single-Click "**Transfer**",
2. Single-Click "**Send Text File**"

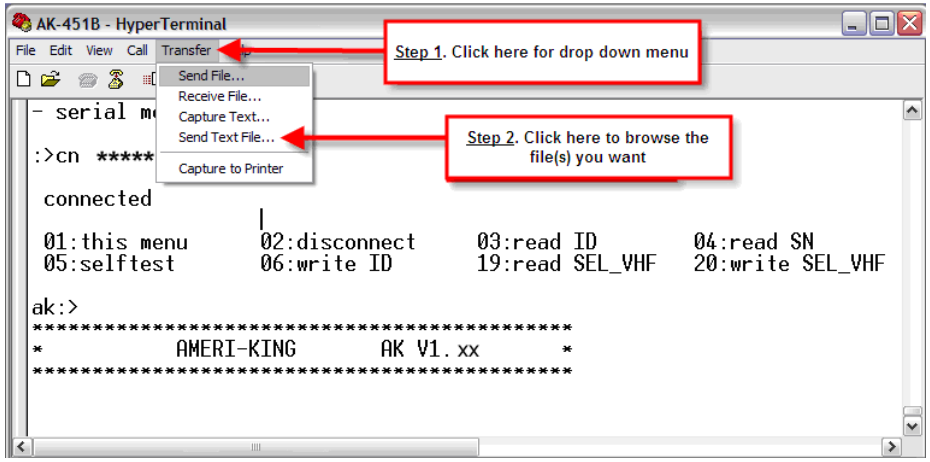

Figure 8

- **Inserting Ameri-King GPS Location Coordinate** (**See Figure 9**)
  1. Single-Click on "**Ameri-King GPS Location**" (The file contains the coordinate of Ameri-King GPS Location.)
  2. Set the switch of the ELT to "ON" position.
  3. Single-Click on "**Open**" button to insert the coordinate of Ameri-King GPS Location to the ELT.
  4. **DO NOT** turn the ELT off. Wait for 50 seconds and you will receive 30 Hex digits (Ignore the first 6 digits) coming from the ELT that contains the coordinate of the Ameri-King GPS Location (See Figure 10). Use the 406MHz Decode Program to verify the coordinate input.

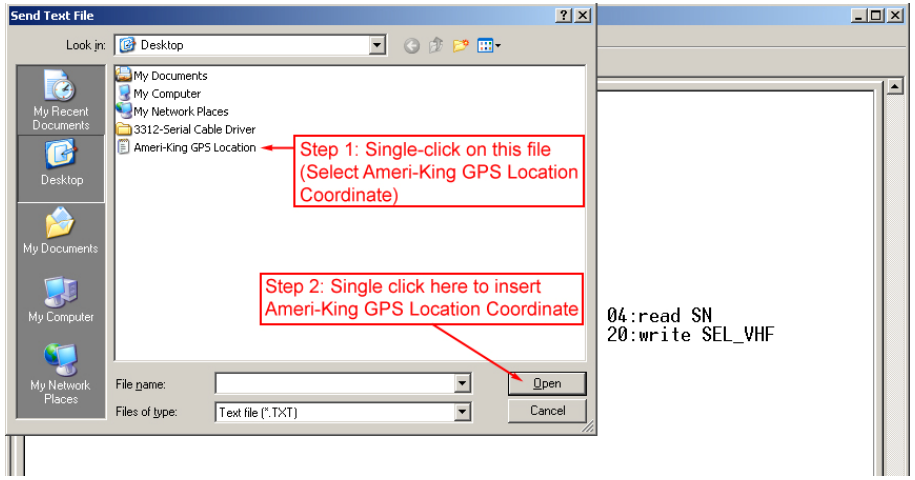

Figure 9

- **To verify the coordinate in the 30 Hex digits message:**
    - Double-click on “406MHz Decode” Icon to open up the 406MHz Decode Program (See Figure 11)
    - Enter last 30Hex digits (last 30 digits of 36) into the 406 MHz Decode Program. The 30 Hex digits are the numbers you just have seen from the ELT which appears after 50 seconds on the programming window. In this example you have to select the “30 Hexadecimal” round button and press Process button to decode these 30 Hex numbers.

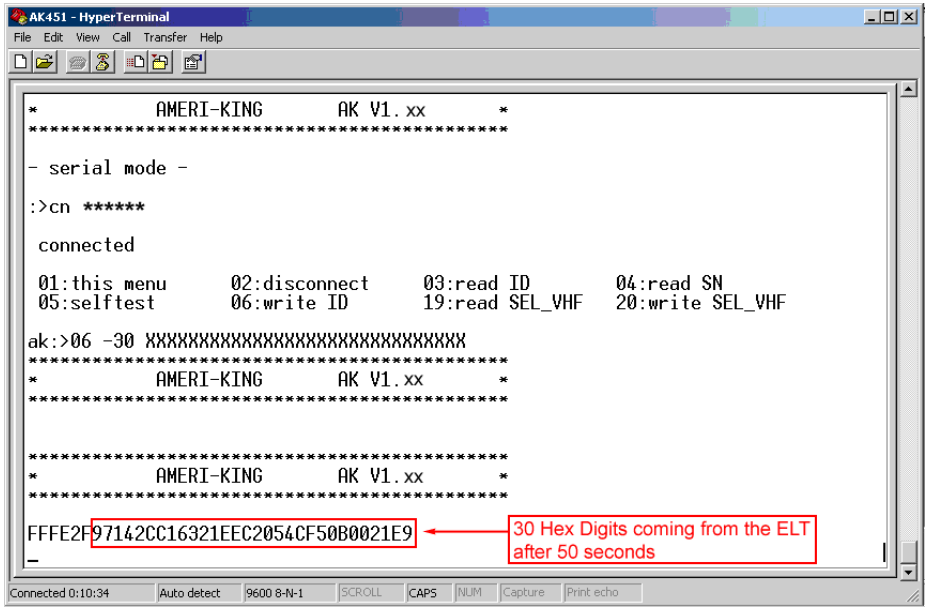

Figure 10

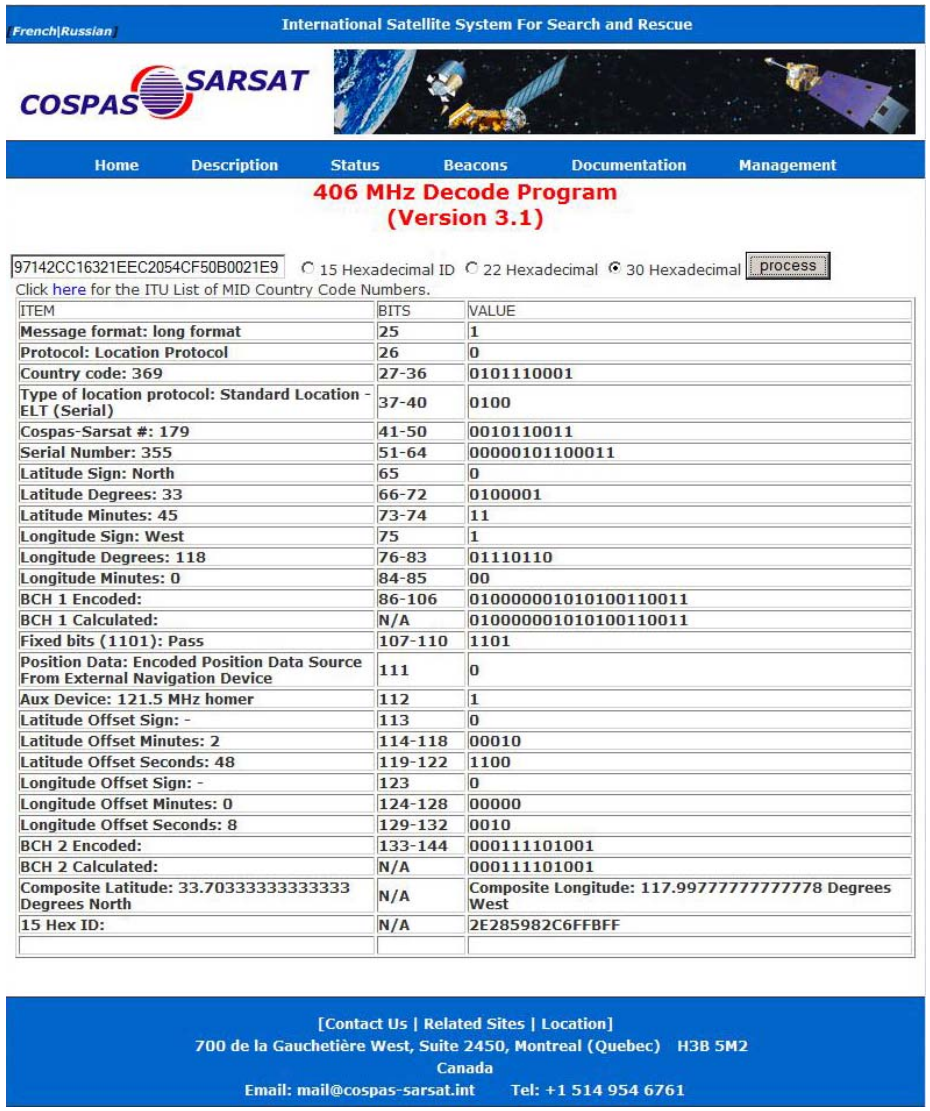

ITEM	BITS	VALUE
Message format: long format	25	1
Protocol: Location Protocol	26	0
Country code: 369	27-36	0101110001
Type of location protocol: Standard Location - ELT (Serial)	37-40	0100
Cospas-Sarsat #: 179	41-50	0010110011
Serial Number: 355	51-64	00000101100011
Latitude Sign: North	65	0
Latitude Degrees: 33	66-72	0100001
Latitude Minutes: 45	73-74	11
Longitude Sign: West	75	1
Longitude Degrees: 118	76-83	01110110
Longitude Minutes: 0	84-85	00
BCH 1 Encoded:	86-106	01000000101010011 0011
BCH 1 Calculated:	N/A	01000000101010011 0011
Fixed bits (1101): Pass	107-110	1101
Position Data: Encoded Position Data Source From External Navigation Device	111	0
Aux Device: 121.5 MHz homer	112	1
Latitude Offset Sign: -	113	0
Latitude Offset Minutes: 2	114-118	00010
Latitude Offset Seconds: 48	119-122	1100
Longitude Offset Sign: -	123	0
Longitude Offset Minutes: 0	124-128	00000
Longitude Offset Seconds: 8	129-132	0010
BCH 2 Encoded:	133-144	000111101001
BCH 2 Calculated:	N/A	000111101001
Composite Latitude: 33.70333333333333 Degrees North	N/A	Composite Longitude: 117.99777777777778 Degrees West
15 Hex ID:	N/A	2E285982C6FFBFF

Figure 11

NOTE:

1. BCH 1 Encoded and BCH 1 Calculated MUST have the same value
2. BCH 2 Encoded and BCH 2 Calculated MUST have the same value

APPENDIX I

RTCA DO-160D ENVIRONMENTAL QUALIFICATION FORM
NOMENCLATURE: ELT EMERGENCY LOCATOR TRANSMITTER

TYPE/MODEL/PART NO: AK-451-( ) SERIES.
TSO NUMBER: C-126, C-91a
MANUFACTURER: **AMERI-KING CORPORATION**
17881 Sampson Lane
HUNTINGTON BEACH, CA 92648
ENVIRONMENTAL CATEGORIES:
F1XBA[204/183][204/183]XR[204/183]XXSZXXX(AC)[204/183](BC)
XXXX(C/204)

CONDITIONS	SECTION	TEST CONDUCTED CATEGORIES
Temperature and Altitude	4.0	F1
Low Temperature	4.5.1	F1
Low Temperature	4.5.1	F1
High Temperature	4.5.2 & 4.5.3	F1
In-Flight Loss of Cooling	4.5	X
Altitude	4.6.1	F1
Decompression	4.6.2	Per. DO-204/183
Overpressure	4.6.3	Per. DO-204/183
Temperature Variation	5.0	B
Humidity	6.0	A
Operational Shock and Crash Safety	7.0	Per. DO-204/183
Vibration	8.0	Per. DO-204/183
Explosion	9.0	X
Waterproofness	10.0	R
Fluids Susceptibility	11.0	Per. DO-204/183
Sand and Dust	12.0	X

Fungus	13.0	X
Salt Pray	14.0	S
Magnetic Effect	15.0	Z
Power Input	16.0	X
Voltage Spike	17.0	X
Audio Frequency Susceptibility	18.0	X
Induced Signal Susceptibility	19.0	A
Radio Frequency Susceptibility	20.0	Per. DO-204/183
Radio Frequency Emission	21.0	B
Lightning Induced Transient Susceptibility	22.0	X
Lightning Direct Effects	23.0	X
Icing	24.0	X
Electrostatic Discharge	25.0	X
Flame Test		Per. DO-204/183

APPENDIX J

Approval, FAA TSO C-126 / C-91a Equipment Approval dated 07/24/2008

Approval, EASA ETSO 2C-126/2C-91a EASA.IM.210.1102 dated 11/20/2008

Approval, Transport Canada dated 11/26/2008

Approval, Industry Canada, ID 2474A-A451PLAFAPS, dated 11/06/2008

Approval, Brazil Certificado Anatel, dated 03/31/2009

Approval, EASA Minor Change Approval P-EASA.A.C.12674 dated 7/24/2009

Approval, EASA Minor Change Approval 10027068, dated 9/3/2009

Approval, EASA Minor Change Approval 10026863, dated 8/18/2009

Approval, EASA Minor Change Approval 10026866, dated 8/18/2009

Approval, Austria for "Historic Aircraft" like PA-18, 19 Series, Bücker T131, JOB 15, CSS13, dated 4/16/2010

Email Response from EASA to Ameri-King regarding Acceptability of FAA Form 8130-3 Export Form in EU Europe Union dated 10/2/2009

Approval, Japan Civil Aviation Board Approval, dated 4/7/2010

Approval, COSPAS-SARSAT Type Approval Certificate No.179 dated 09/24/2007

U.S. Department of Transportation
Federal Aviation Administration

Transport Airplane Directorate
Los Angeles Aircraft Certification Office
3960 Paramount Boulevard
Lakewood, California 90712-4137

JUL 2 4 2008

Ameri-King Corporation
Attn.: Keith Van
17881 Sampson Lane
Huntington Beach, CA 92648

Dear Mr. Van:

Ameri-King Corporation
Technical Standard Order C91a and C126

This is reply to your letter dated June 28, 2008, requesting Technical Standard Order (TSO) authorization for your Emergency Locator Transmitter (ELT). The statement of conformance to TSOs C91A, C126 and the submitted data are accepted. Effective the date of this letter, you are authorized to identify the following ELT with the marking requirments defined in Title 14 Code of Federal Regulations (14 CFR) part 21.607 (d) and in TSOs C91a and C126.

PART NUMBER	DESCRIPTION
AK-451-(AF)	406 MHz ELT Emergency Locator Transmitter, 406/121.5/243.0 MHz, with GPS Position
AK-451-(AF),(AP)	406 MHz ELT Emergency Locator Transmitter, 406/121.5/243.0 MHz, with GPS Position
AK-451-(AP), -(S)	406 MHz ELT Emergency Locator Transmitter, 406/121.5/243.0 MHz, with GPS Position

Note: **This TSO Authorization do not constitute the TSO-C142 or C142a for Non-Rechargeable Lithium Cells and Batteries.**

This TSO Authorization do not include TSO-C91a or C126 for the Antennas.

Your Quality Control System, as defined in your Quality Control Manual, currently on file at the Los Angeles Manufacturing Inspection District Office, is considered satisfactory for production of this article at your Huntington Beach, California facility.

Purpose - Aviation Safety Professionalism - Technical Excellence Pride -Highest Quality

As required by the TSO, the following statement must be furnished with each manufactured unit:

> "The conditions and tests required for TSO approval of this article are minimum performance standards. It is the responsibility of those installing this article either on or within a specific type or class of aircraft to determine that the aircraft installation conditions are within the TSO standard. TSO articles must have separate approval for installation in an aircraft. The article may be installed only if performed under 14 CFR part 43 or the applicable airworthiness requirements."

Any design changes to this TSO article must be forwarded to this office as outlined in 14 CFR § 21.611(a) with minor changes submittal intervals not to exceed six months. Notification of changes should be made prior to shipment.

As recipient of this authorization, you are required to report any failure, malfunction, or defect relating to this authorization in accordance with the provisions of 14 CFR § 21.3. The report should be communicated initially by telephone to the Manager, Technical and Administrative Support Staff, ANM-103L, (562) 627-5300; within 24 hours after it has been determined the failure has occurred and followed up with a written notice. FAA Form 8010-4 (Malfunction or Defect Report) or other appropriate format is acceptable in transmitting the required details.

This authorization is not transferable to another person or location and is effective until surrendered, withdrawn, or otherwise terminated by the Administrator. This authorization pertains only to manufacturing operations at the above address. This office must be notified at least 30 days in advance of any proposed facility relocation to preclude interruption while awaiting quality control approval of that facility. As required by 14 CFR § 21.613(b), you must also notify the FAA when you no longer manufacture a TSO approved article.

Please note that technical data retained by the FAA may be subject to Freedom of Information Act (FOIA) request. As such, this office will notify you of all such request pertaining to your data and afford you the opportunity to defend the release of the data.

If you have any questions regarding this authorization, contact Mr. Carlton Woo, Manager, Technical & Administrative Support Staff, at telephone number (562) 627-5300, or by e-mail carlton.woo@faa.gov, or FAX number (562) 627-5210.

Sincerely,

for Carlton K. Woo
Manager, Technical and Administrative Support Staff

European Aviation Safety Agency

EUROPEAN TECHNICAL STANDARD ORDER (ETSO) AUTHORISATION

EASA.IM.21O.1102

This European Technical Standard Order (ETSO) Authorisation is issued by EASA, acting in accordance with Regulation (EC) No. 216/2008 on behalf of the European Community, its Member States and of the European third countries that participate in the activities of EASA under Article 66 of that Regulation, subject to conditions specified below, to

Ameri-King Corporation
17881 Sampson Lane
Huntington Beach
CA 92648
United States

in accordance with Commission Regulation (EC) No. 1702/2003, Part 21, Section A, Subpart O and ETSO 2C126, 2C91a

for

AK-451-(AF)(AP)(S) Emergency Locator Transmitter with GPS Position interface
P/N AK-451-(AF) (AP) (S)
DDP No. 451 Revision NC-1 or Subsequent Revisions

Deviations:
Use of DO-160E for environmental testing and use of 406.028 MHz instead of 406.025 MHz as operating frequency

Conditions

1. The above ETSO Authorisation holder is only authorised to identify an Article with this ETSO marking whilst remaining in compliance with the conditions retained for the Issue of this Authorisation.
2. This ETSOA does not constitute an installation approval. It is the responsibility of those installing this article to determine that the aircraft installation conditions are within the ETSO standards.

This Authorisation shall remain valid until surrendered or revoked.

For the European Aviation Safety Agency,
Date of Issue: November 20, 2008

Markus GOERNEMANN
Certification Manager
Parts & Appliances

EASA Form 92 Issue 1

Transport Canada Transports Canada

Ottawa, Ontario
K1A 0N8

Your file Votre référence

Our file Notre référence
5012-E3-9 (4511642)

November 26, 2008

Mr. Keith Van
Q.C. Manager
Ameri-King Corporation
17881 Sampson Lane
Huntington Beach, CA, USA
92648

Subject: Approval of Ameri-King Corporation – AK-451-(AF), AK-451-(AP), and AK-451-(S) Emergency Locator Transmitters

Reference: Ameri-King Corporation letter to Transport Canada Civil Aviation (TCCA) dated August 1, 2008 (RDIMS # 4511642 attachment)

Dear Mr. Van:

This correspondence is in response to the referenced letter whereby Ameri-King Corporation requested TCCA approval of the above subject Emergency Locator Transmitters (ELT).

The documents submitted in support of this request have been reviewed and found to be in compliance with the relevant Canadian Standards.

This letter constitutes an airworthiness approval by Transport Canada for the ELT models indicated below that are eligible for installation on Canadian registered aircraft. TCCA will communicate this airworthiness approval to Industry Canada.

Model Number	Reference
AK-451-(AF)	TSO-C126, -C91a
AK-451-(AP)	TSO-C126, -C91a
AK-451-(S)	TSO-C126, -C91a

NOTE: The approved battery pack for the above ELTs is the Lithium Manganese Dioxide ($LiMnO_2$) Part No. 4500010-1.

It is noted that ELTs require a Radio Equipment (RE) approval by Industry Canada (IC) in order to qualify for use in Canada. Accordingly, Ameri-King Corporation is requested to apply directly to Industry Canada to obtain this RE approval. Please forward proof of the approval by IC to Mr. J.M.J. Levesque at the address shown

Canada

.../2

26-0585 (98-06)

immediately below. Upon receipt of this evidence, Transport Canada will then include the subject ELT models on the "Approved Emergency Locator Transmitters" list showing the only equipment eligible for installation on Canadian registered aircraft. This list is available at http://www.tc.gc.ca/CivilAviation/certification/elt.htm.

Mr. J.M.J. Levesque
Senior Project Manager
National Aircraft Certification Branch (AARDE)
Civil Aviation, Transport Canada
Tower C, Place de Ville (3rd Floor)
330 Sparks Street
Ottawa, Ontario
K1A 0N5

Should you require further information, please do not hesitate to contact Paul Swan by telephone at 613-952-4439, by facsimile at 613-996-9178, or by email at paul.swan@tc.gc.ca.

Yours truly,

for J.D. Turnbull
Chief, Project Management
National Aircraft Certification
Civil Aviation

cc: Industry Canada (by email – certification.bureau@ic.gc.ca)

American Telecommunications Certification Body Inc.
6731 Whittier Ave, McLean, VA 22101

REF No. ► ATCB006443

TECHNICAL ACCEPTANCE CERTIFICATE — CERTIFICAT D'ACCEPTABILITÉ TECHNIQUE

CERTIFICATION No. No. DE CERTIFICATION	►	**2474A-A451PLAFAPS (Single)**
ISSUED TO DÉLIVRÉ A	►	**Ameri-King Corp. 17881 Sampson Lane Huntington Beach, CA 92648**
TYPE OF EQUIPMENT TYPE DE MATÉRIEL	►	**[287 Suffix] - (PL) PLB; [287 Suffix] - (AF) ELT, automatic fixed; [287 Suffix] - (AP) ELT, automatic portable; [287 Suffix] - (S) ELT, survival**
TRADE NAME AND MODEL MARQUE ET MODELE	►	**AK-451-PLB(AF)(AP)(S)**
FREQUENCY RANGE BANDE DE FRÉQUENCES	►	**406.028MHz fixed, 121.5MHz fixed**
EMISSION DESIGNATION DESIGNATION D'ÉMISSION	►	**16K0G1D**
R.F. POWER RATING PUISSANCE NOMINALE H.F.	►	**Min: 3.16W @ 406Mhz; 0.050W @ 121.5MHz Max: 7.94W @ 406MHz; 0.2W @ 121.5MHz**
ANTENNA ANTENNE	►	**-3/+4dBi**
TEST LABORATORY LABORATOIRE D'ESSAI	►	**Compatible Electronics 19121 EL TORO ROAD Silverado / Lake Forest, CA 92676 Tel: (949) 589-0700 Fax: (949) 589-7700**
SITE NUMBER NUMÉRO DE SITE	►	**2154C-1**
CERTIFIED TO CERTIFIÉ SELON LE	►	SPECIFICATION CAHIER DES CHARGES **RSS287** ISSUE ÉDITION **Issue 1**

Certification of equipment means only that the equipment has met the requirements of the above noted specification. License applications, where applicable to use certified equipment, are acted on accordingly by the issuing office and will depend on the existing radio environment, service and location of operation.

This certificate is issued on condition that the holder complies and will continue to comply with the requirements of the radio standards specifications and procedures issued by Industry Canada.

La certification du matériel signifie seulement que le matériel a satisfait aux exigences de la norme indiquée ci-dessus. Les demandes de licences nécessaires pour l'utilisation du matériel certifié sont traitées en conséquence par le bureau de délivrance et dépendent des conditions radio ambiantes, du service et de l'emplacement d'exploitation.

Le présent certificat est délivré à condition que le titulaire satisfasse et continue de satisfaire aux exigences et aux procédures d'Industrie Canada.

DATE OF ISSUE: November 26, 2008

William H. Graff
President

REPÚBLICA FEDERATIVA DO BRASIL
AGÊNCIA NACIONAL DE TELECOMUNICAÇÕES
ANATEL

Certificado de Homologação
(Intransferível)

Nº **0693-09-5085**

Validade: **31/03/2011**
Emissão: **31/03/2009**

Solicitante:
NAVES AVIACAO LTDA
RUA MAJOR CAETANO DA COSTA 0201205 SANTANA
02012-050 - SAO PAULO - SP

Fabricante:
AMERI-KING CORP.
SAMPSON LANE 17881
HUNTINGTON BEACH - EUA

Este documento homologa, nos termos do Regulamento para Certificação e Homologação de Produtos para Telecomunicações, aprovado pela Resolução Anatel nº 242, de 30 de novembro de 2000, a Declaração de Conformidade emitida pelo solicitante. Esta homologação é expedida em nome do solicitante aqui identificado e é válida somente para o produto a seguir discriminado, cuja utilização deve observar as condições estabelecidas na regulamentação do serviço ou aplicação a que se destina.

Tipo:
Transmissor de Radiobaliza - Categoria **II**

Modelo(s):
AK-451-(AF)
AK-451-(AP)
AK-451-(S)
AK-451-PLB

Serviço/Aplicação:
Serviço Especial de Radiodeterminação

Características técnicas básicas:

Freqüência de Operação (MHz)	Potência Máxima de Saída (W)	Designação de Emissões
406,028	5,0	16K0G1D
121,5	0,1	3K20A3X

Observações:

Constitui obrigação do fabricante do produto no Brasil providenciar a identificação do produto homologado, nos termos do art. 39 do Regulamento anexo à Resolução Anatel nº 242, em todas as unidades comercializadas, antes de sua efetiva distribuição ao mercado, assim como observar e manter as características técnicas que fundamentaram a certificação original.

As informações constantes deste certificado de homologação podem ser confirmadas no SGCH - Sistema de Gestão de Certificação e Homologação, disponível no portal da Anatel. (www.anatel.gov.br).

CÓPIA

Maximiliano Salvadori Martinhão
Gerente Geral de Certificação e
Engenharia do Espectro

Niessler Handelsagentur F. Hanuschgasse 8 2345 Brunn a.G.	EASA Minor Change Approval Ameri-King AK-451 ELT	Doc.:EON-003 Rev.:-

Register	all	Type	DA20-A1 DV20	affected Serial No(s).	all

Information to Design Change

Installation of an Ameri-King AK-451-(AF) (AP)/Whi/Por/WW on the Diamond Aircraft DV20 and DA20-A1 VLA.

Approval Note

	prepared
Name	C. Trieb
Datum	24.07.09
Unterschrift	

EASA Zulassungsvermerk Nr. /	P-EASA.A.C.12674

Niessler Handelsagentur F. Hanuschgasse 8 2345 Brunn a.G.	EASA Minor Change Approval Ameri-King AK-451 ELT	Doc.:EON-003 Rev.:-

Reference of Documents

No.	Document	Rev.	Description	Date
1	IM-451	NC-4.1c2	Installation and Operation Manual	n.a.
2				
3				
4				

List of Documents

No.	Document	Rev.	Description	Date
1	CSN-003	-	Compliance Statement	24.07.09
2	EQRN-003	-	Equipment Qualification Report	24.07.09
3	AMM EON003	-	Aircraft Maintenance Manual Supplement	24.07.09
4	EON-003-Installation Instructions	-	Installation Instructions	24.07.09

European Aviation Safety Agency

MINOR CHANGE APPROVAL

10027068

Project reference: 0010000519-001

Reference: P-EASA.A.C.12672

This Minor Change Approval is issued by EASA, acting in accordance with Regulation (EC) No. 216/2008 on behalf of the European Community, its Member States and of the European third countries that participate in the activities of EASA under Article 66 of that Regulation and in accordance with Commission Regulation (EC) No. 1702/2003 to

Niessler Handelsagentur
Ferd. Hanuschgasse 8
2345 BRUNN AM GEBIRGE
AUSTRIA

and certifies that the change in the type design for the product listed below with the limitations and conditions specified meets the applicable Type Certification Basis and environmental protection requirements when operated within the conditions and limitations specified below:

TC Holder: SEE APPLICATION FOR LIST
Model: REFER TO LIST OF MOTOR-
Model: GLIDERS AND GLIDERS IN THE
Model: EON001-INSTALLATION
Model: INSTRUCTIONS AND ATTACHED TO
Model: APPLICATION

EASA Certification Basis:
CS-22

Description of Design Change:
Installation of an Ameri-King corporation AK-451 ELT as replacement for a Pointer 3000

Associated Technical Documentation:
-EON-001 Engineering Order, dated 24.07.09
-EON001-Installation Instructions, dated 24.07.09
-AMM-EON001 Maintenance Manual Supplement, dated 24.07.09

Limitations:
None

Conditions:
1) Prior to installation of this modification the installer must determine that the interrelationship between this modification and any other previously installed modification will introduce no adverse effect upon the airworthiness of the product.

2) The installation of this modification by third persons is subject to written permission of the approval holder and holding and disposal of the approved appropriate documentation.

3) The approval holder shall fulfil the obligations of Part 21, Paragraph 21.A109.

European Aviation Safety Agency

This Approval shall remain valid unless otherwise revoked.

For the European Aviation Safety Agency,

Date of issue: 03.09.2009

Roger HARDY
Certification Manager
General Aviation

European Aviation Safety Agency

MINOR CHANGE APPROVAL

10026863

Project reference: 0010000520-001

Reference: P-EASA.A.C.12673

This Minor Change Approval is issued by EASA, acting in accordance with Regulation (EC) No. 216/2008 on behalf of the European Community, its Member States and of the European third countries that participate in the activities of EASA under Article 66 of that Regulation and in accordance with Commission Regulation (EC) No. 1702/2003 to

Niessler Handelsagentur
Ferd. Hanuschgasse 8
2345 BRUNN AM GEBIRGE
AUSTRIA

and certifies that the change in the type design for the product listed below with the limitations and conditions specified meets the applicable Type Certification Basis and environmental protection requirements when operated within the conditions and limitations specified below:

TC Holder:	**SEE APPLICATION FOR LIST**
Model:	**REFER TO LIST OF SMALL**
Model:	**AIRPLANES IN THE EON002-**
Model:	**INSTALLATION INSTRUCTIONS**
Model:	**AND ATTACHED TO APPLICATION**

EASA Certification Basis:
CS-23

Description of Design Change:
Installation of an Ameri-King Corporation AK-451 ELT as replacement for a Pointer 3000

Associated Technical Documentation:
EON-002 Engineering Order, dated 24.07.09
EON002-Installation Instructions, dated 24.07.09
AMM-EON002 Maintenance Manual Supplement, dated 24.07.09

Limitations:
None

Conditions:
1) Prior to installation of this modification the installer must determine that the interrelationship between this modification and any other previously installed modification will introduce no adverse effect upon the airworthiness of the product.

2) The installation of this modification by third persons is subject to written permission of the approval holder and holding and disposal of the approved appropriate documentation.

3) The approval holder shall fulfil the obligations of Part 21, Paragraph 21A.109.

European Aviation Safety Agency

This Approval shall remain valid unless otherwise revoked.

For the European Aviation Safety Agency,

Date of issue: 18.08.2009

Roger HARDY
Certification Manager
General Aviation

Annex II Types

EASA has produced this list of Annex II aircraft strictly for information purposes only. It aims to describe the exclusions from the lists of EASA transferred aircraft, EU and non-EU. It is based on information received from several authors internal and external to the Agency.

Whilst every care has been taken in preparing the contents of the list to avoid errors the Agency makes no warranty as to the accuracy, completeness or currency of the content. The Agency shall not be liable for any kind of damages or other claims or demands incurred as a result of incorrect, insufficient or invalid data, or arising out of or in connection with the use, copying, or display of the content, to the extend permitted by European and national laws. The information contained in the list should not be construed as legal advice.

1. Aircraft listed are within the definition of Annex II to Regulation 1592/2002. Because of the subjective nature of Annex II, the proposed revision (see at the end of this table) has been used to aid in interpretation of the current Annex II; only compliance with paragraphs (a) and (d) are considered. This list has been produced in conjunction with the NAAs of the State of Design.
2. Not every type of aircraft pre-1939 or sailplanes pre-1955 is listed because these can be considered to be Annex II on the basis of their being significant steps in aviation development.
3. Sailplanes are listed and, in the case of Germany, the list is exhaustive. This is not the case for some other countries and if an NAA has not provided a list, the criteria 'designed before 1955, built before 1975' has been used. In many cases the NAA assessment of 'significant step in development….' has been taken.
4. Aircraft for which a civilian TC or equivalent approval is known, this is listed. The absence of a TC number does not mean that the aircraft has no formal civilian approval, just that at the time of writing there was no immediate evidence of this fact.
5. Warbird rebuilds that are believed to be underway in the EU are listed and this includes aircraft currently not airworthy but which could be put back into airworthy condition. Warbird rebuilds in non-EU countries of types not yet seen in the EU are not included.
6. The list does not include aircraft that were originally designed for civil purposes but which were subsequently used by the military except where a discrete military variant can be identified.
7. Certain aircraft (some Jodel series, Emeraude series, including Smargd and Linnet) have been declared as Annex II because of direct similarity with the original Jodel D11 and CP30 aircraft, even though design/production of later variants may not fit in with the 1955/1975 criterion. Similarly, the Beagle Airedale has also been accepted as Annex II as a direct development of the Auster series which are clearly Annex II.
8. 'Complex' multi-piston-engined transport aircraft (DC-4, DC-6, Constellation, ATL-98 etc) are declared Annex II on the basis of their historical significance.

9. Some aircraft (e.g. PA-18, An-2) had very long production runs and are declared as Annex II even though production continued after 1975. This is because the vast majority of aircraft were built before 1975, they were designed before 1955 and can claim some historical importance. In addition, it is undesirable to have some examples of an aircraft type split between Annex II and
10. The list includes some ex-military types, examples of which did not serve with the military. This is to also avoid splitting some aircraft types between Annex II and EASA.

Tables

Table 1 EU States of Design; powered aircraft, fixed wing
Table 2 Non-EU States of Design; powered aircraft, fixed wing
Table 3 Sailplanes and Powered Sailplanes (EU and non-EU)
Table 4 Rotorcraft (EU and non-EU)
Table 5 Balloons and Airships (EU and non-EU)

Change record from Issue 6:

Issue 6 dated 6 August 2007

1. Removal of Apex (Robin/CEA) DR220, 221, 250, 253 from the list at the request of Apex and DGAC-France (borderline case) and addition to list of EU transferred aircraft types.
2. Addition of Yak-50 on the basis of service with DOSAAF and similarity with Yak-52 (CIS).
3. Addition of Netherlands state of design sailplanes on the basis of year of design and construction.
4. Addition of Gardan GY100 Bagheera (France) on the basis of it being an R&D prototype.

Issue 7 dated 8 August 2007

1. Deletion of Dragonfly Model 333 from Italy: rotorcraft at request of ENAC and TC holder due to weight increase.

Issue 8 dated 13 September 2007

1. Removal of certain American Champion (Bellanca) 7 series on the basis of their production continuing after 1975, some being in current production.
2. Removal of FFA AS202/32TP from Austria; it is correctly listed under Switzerland.
3. Correction of spelling of A. Comte (Switzerland).
4. Correction of BG100 to BG135 (UK sailplane).
5. Removal of SZD-9 bis Bocian 1D/E (Polish sailplanes).
6. Removal of Scheibe Bergfalke, Spatz, Specht and Sperber (German sailplanes) on the basis of the existing valid EASA TCs.
7. Addition of SZD-31, SZD-35, SZD-39, SZD-40X, SZD-41, SZD-50-1M, SZD-51-0, SZD-52-0, SZD-52-1 (Polish sailplanes) on the basis of their being regarded as prototypes or development aircraft.
8. Correction to add 'Breguet' to 900, 901 series sailplanes (France) instead of Nord/SNCAN

Issue 9 dated 11 February 2008

1. Addition of Table non-EU balloons and airships to Table 5
2. Addition of Russian balloons Interavia 61TA, 70TA, 80TA and A/S Dirizhalstroy DS-AT8
3. 'New Annex II' adopted in lieu of original Annex II from Regulation 1592/2002

Issue 10 dated 25 February 2008

1. Removal of Scheibe SF23A to EU product list with SAS
2. Alphabetical order layout introduced for ease of search
3. Addition of Aviamilano P-19 Scicciolo and Macchi AL60

Table 1 : EU states of Design; powered aircraft, fixed wing

State of Design	*Manufacturer*	*Type*	*Evaluation against Annex II criteria*					
			Historic event	*Development of Aviation*	*Role in armed forces*	*Design <1.1.55*	*Production <1.1.75*	*State of Design TC and Comments*
Austria	Arge Phönix	Etrich Taube Typ F	Yes	Yes				Replica
	Krobath	Pischof Autoplan	Yes	Yes				Replica
	Oberlerchner	Job 15 Series				Yes	Yes	1314
Belgium	Fairey SA	T66 Tipsy Nipper				Yes	Yes	Mostly amateur-built
	Fairey SA/Tipsy	S-2				Yes	Yes	
		B				Yes	Yes	
		Belfair				Yes	Yes	
		Trainer				Yes	Yes	
		Primer				Yes	Yes	
	Stampe	SV4 series			Yes	Yes	Yes	DGAC-F TCDS 6
Czech Republic	Aero	45, 145, Super Aero 45 series				Yes	Yes	
	Aero Vodochody	MiG 15			Yes	Yes	Yes	
		L29 Delfin			Yes	Yes	Yes	
		L39			Yes	Yes	Yes	
	CZL	L-40 Meta-Sokol				Yes	Yes	
		L-60 Brigadyr				Yes	Yes	
	Mraz	M-1 Sokol series		First GA post WII		Yes	Yes	
		Cáp (Fi156 Storch)			Yes	Yes	Yes	

Table 1 : EU states of Design; powered aircraft, fixed wing

State of Design	*Manufacturer*	*Type*	*Evaluation against Annex II criteria*					
			Historic event	*Development of Aviation*	*Role in armed forces*	*Design <1.1.55*	*Production <1.1.75*	*State of Design TC and Comments*
	Yakovlev	C-11			Yes	Yes	Yes	
	Zlin/Moravan	Z-131, C-104A (Bü131)			Yes	Yes	Yes	
		C6, 106 and Zlin 391 (Bü181)			Yes	Yes	Yes	
		26			Yes	Yes	Yes	
		LC-103A (Si204)			Yes	Yes	Yes	
		Z181, 281, 381				Yes	Yes	
		Zefir 192				Yes	Yes	
Denmark	SAI	KZ all series I-IX		Significant to Denmark	No	Yes	Yes	
		KZ-X			Yes	Yes	Yes	
Finland	Valmet	L70 Vinka			Yes			
		L90 TP			Yes			Prototype
France	Blériot	XI	Yes	Yes	Yes	Yes	Yes	
	Blériot	XI-2	Yes	Yes	Yes	Yes	Yes	
	Bréguet	XIV replica	WWI	World distance records	Yes	Yes	Yes	
	Boisavia	B601L				Yes	Yes	TCDS 23
		B602A				Yes	Yes	TCDS 58
	Brochet	MB 100/101				Yes	Yes	101 could be an error; Model 110 is not Annex II

Table 1 : EU states of Design; powered aircraft, fixed wing

State of Design	*Manufacturer*	*Type*	*Evaluation against Annex II criteria*					
			Historic event	*Development of Aviation*	*Role in armed forces*	*Design <1.1.55*	*Production <1.1.75*	*State of Design TC and Comments*
		MB 70/71/72				Yes	Yes	TCDS 11
		MB 80				Yes	Yes	TCDS 12
	CAB	GY20 & 30 Minicab & Supercab series GY201		SALS competition		Yes	Yes	TCDS 4 GY201 Home built
	Caudron	G.III	WWI		Yes	Yes	Yes	
		Caudron C270		Pre-1939		Yes	Yes	
		Caudron C275		Pre-1939		Yes	Yes	
		Caudron C600		Pre-1939		Yes	Yes	
		Caudron C635		Pre-1939		Yes	Yes	
		Caudron-Renault JN760		Pre-1939		Yes	Yes	
	Dassault	MD-311 Flamant			Yes	Yes	Yes	
		MD-312 Flamant II			Yes	Yes	Yes	
		MD 315 Flamant			Yes	Yes	Yes	
		Mystère IVA			Yes	Yes	Yes	
	Dewoitine	D27-5A			Yes	Yes	Yes	
	Fouga	CM 170 Magister			Yes	Yes	Yes	
	Fouga	CM 175 Zephir			Yes	Yes	Yes	
	Fouga	CM CM8/13			Yes	Yes	Yes	
	Gardan	GY100 Bagheera						Prototype only; R&D TC 47

Table 1 : EU states of Design; powered aircraft, fixed wing

State of Design	*Manufacturer*	*Type*	*Evaluation against Annex II criteria*					
			Historic event	*Development of Aviation*	*Role in armed forces*	*Design <1.1.55*	*Production <1.1.75*	*State of Design TC and Comments*
	Hurel-Dubois	HD-34		High AR special		Yes	Yes	
	Indraero	101, 110				Yes	Yes	TCDS 14&15
	Jodel/Wassmer/EAC/SAN/Alpavia (see Note 8 on page 1)	D11 series		SALS competition		Yes	Yes	Mostly believed to be amateur-built
		D 112, 127 series				Yes	Yes	TCDS 3
		D 1120, 1190 series				Yes	Yes	TC 23
		D 117 series				Yes	Yes	TCDS 16
		D 119, 128 series				Yes	Yes	TCDS 21
		D120 series				Yes	Yes	TCDS 17
		D 140 series				Yes	Yes	TCDS 20
		D 150 series				Yes	Yes	TCDS 81, TC 27
		DR 100, 105, series				Yes	Yes	TCDS 34
		DR1050, 1051 series				Yes	Yes	TCDS 34, TC 6
	Jurca	MJ2				Yes	Yes	
	Latécoere	17P replica		Yes		Yes	Yes	
	Legrand Simon	LS60				Yes	Yes	TCDS 76
	Leopoldoff	L55 Colibri				Yes	Yes	Believed to be L7 Colibri
	Matra	M360 Jupiter series		Centreline thrust concept		No but	Yes	TC33 TCDS 99 bis and 109

Table 1 : EU states of Design; powered aircraft, fixed wing

State of Design	*Manufacturer*	*Type*	*Evaluation against Annex II criteria*					
			Historic event	*Development of Aviation*	*Role in armed forces*	*Design <1.1.55*	*Production <1.1.75*	*State of Design TC and Comments*
	Max Holste	MH152, 1521, 153 Broussard			Yes	Yes	Yes	TCS 47 & 57
		MH260 Super Broussard				Yes	Yes	TCDS 70 TC 21
	Morane Saulnier/EADS Socata	Type A1	WWI		Yes	Yes	Yes	
		Type H	WWI		Yes	Yes	Yes	
		MS130			Yes	Yes	Yes	
		MS138			Yes	Yes	Yes	
		MS181			*Yes?*	Yes	Yes	
		MS185		Leisure aircraft	*Yes?*	Yes	Yes	
		MS230			Yes	Yes	Yes	
		MS315			Yes	Yes	Yes	
		MS317			Yes	Yes	Yes	TCDS 66
		MS341/3			Yes	Yes	Yes	
		MS406 (see Switzerland)	WWII		Yes	Yes	Yes	
		MS500, 501, 502, 504, 505 Criquet	WWII		Yes	Yes	Yes	TCDS 98 bis
		MS733			Yes	Yes	Yes	CDNI
		MS760 Paris		First production light jet	Yes	Yes	Yes	TC 3 TCDS 19
	Nord/SNCAN	1000 series		Ex-Me108 Rebirth GA post-WWII	Yes	Yes	Yes	TCDS 45

Table 1 : EU states of Design; powered aircraft, fixed wing

State of Design	Manufacturer	Type	Evaluation against Annex II criteria					
			Historic event	Development of Aviation	Role in armed forces	Design <1.1.55	Production <1.1.75	State of Design TC and Comments
		1100 series		Ex-Me208 Rebirth GA post-WWII	Yes	Yes	Yes	TCS 89
		1200 series				Yes	Yes	TCDS 1
		NC853-859		SALS competition	Yes ALAT	Yes	Yes	TCDS 5 & 9
		2501/2504 Noratlas			Yes	Yes	Yes	
		3202			Yes	Yes	Yes	TC 41 TCDS 48
		3400			Yes	Yes	Yes	
		260			Yes	Yes	Yes	
		Stampe SV4 series			Yes	Yes	Yes	TCDS 6 See Belgium
	Piel (see Note 8 on Page 1)	CP 1310, 1315, 1330				Yes	Yes	TCDS 75, TC 20
		CP30				Yes	Yes	TCDS 33
		CP 301A				Yes	Yes	TCDS 18
		CP301B				Yes	Yes	TCDS 28
		CP 320				Yes	Yes	TCDS 75, TC 20
		CP 605A				Yes	Yes	TCDS 128, TC 57
		Scintex CP 301 series				Yes	Yes	TCDS 46, TC 7
		Scintex ML250 Rubis				Yes	Yes	TCDS 92, TC 29
	Potez	60		Pre-1939		Yes	Yes	
		84, 840, 841, 842 series				Yes	Yes	TCDS 104, TC 36

Table 1 : EU states of Design; powered aircraft, fixed wing

State of Design	Manufacturer	Type	Evaluation against Annex II criteria					
			Historic event	Development of Aviation	Role in armed forces	Design <1.1.55	Production <1.1.75	State of Design TC and Comments
	Reims Aviation	1521 Broussard (see Max Holste)			Yes	Yes	Yes	TCDS 57
	Sferma	Beech-Sferma 60 series				Yes	Yes	TCDS 63, TC 18
	SIPA	90, 91, 92, 93, 94 series		SALS		Yes	Yes	TCS 7
		900 series				Yes	Yes	TCDS 8,
		S251				Yes	Yes	Believed to be S2510 Antilope TCDS 94
	SNCASO	SO4050 Vautour			Yes	Yes	Yes	
	SPAD/Deperdussin	Deperdussin GB 1913P		Yes		Yes	Yes	
		SPAD S XIII C1	WWI		Yes	Yes	Yes	
	SRCM	153				Yes	Yes	TCDS 53, TC 9
	Wassmer/Issoire	WA50, 80 series on TC51		First French GA GRP		Yes	Yes	
	Zelant-Gazuit	Gazuit Valladeau 1020, 1031				Yes	Yes	TCDS 135, TC 64
Germany	Airconcept	VoWi 10		Unusual tail unit				1048
	Albatros	C1	WWI		Yes	Yes	Yes	Individual aircraft
	Apparatenbau Nabern	Kl 107 series		Yes		No	Yes	704/SA
	Arado	Ar79B	WWII		Yes	Yes	Yes	TC 516/SA
	Blume	Bl 502 & 503		Yes		Yes	Yes	TC 706/SA
	Bücker/Rangsdorf	Bü131 all marks	WWII		Yes	Yes	Yes	717/SA

Table 1 : EU states of Design; powered aircraft, fixed wing

State of Design	*Manufacturer*	*Type*	*Evaluation against Annex II criteria*					
			Historic event	*Development of Aviation*	*Role in armed forces*	*Design <1.1.55*	*Production <1.1.75*	*State of Design TC and Comments*
		Bü133 all marks	WWII		Yes	Yes	Yes	582/SA
		Bü180, 181	WWII		Yes	Yes	Yes	716/SA
	Dittmar	HD 153 series	No	First German a/c after WWII	No	No	Yes	501/SA
	Dornier	Do27			Yes			514/SA
	Dornier (RUAG)	Alpha Jet			Yes			Individual aircraft
	Extra	EA330/L & S						R&D status; TC not completed
	Fieseler	Fi156 Storch	WWII		Yes	Yes	Yes	725/SA
	Flug-Werk GmbH	FW190 replica	~	Yes		Yes		Individual aircraft
	Focke Wulf	FW44 Stieglitz	WWII		Yes	Yes	Yes	726/SA
	Fokker	Dr. 1	WWI		Yes	Yes	Yes	Individual aircraft
	HFB MBB	HFB 320		Yes		No	No	2506/TA
	Hirth	Hi-27 Mk II Acrostar		German aerobatic special		No	Yes	1006/SA
	Junkers	Ju52/3m	WWII		Yes	Yes	Yes	2527/TA
	Klemm	L25 series				Yes	Yes	573/SA
		Kl 35 all variants	WWII		Yes	Yes	Yes	710/SA
	Luftfahrzeug Union	LFU 205	No	Yes	No	No	No	665/SA
	Messerschmitt	Bf108	WWII	Yes	Yes	Yes	Yes	572/SA
		Me109 all variants	WWII	Yes	Yes	Yes	Yes	Individual aircraft
		Me262 replica	~	Yes		Yes		Individual aircraft

Table 1 : EU states of Design; powered aircraft, fixed wing

State of Design	*Manufacturer*	*Type*	*Evaluation against Annex II criteria*					
			Historic event	*Development of Aviation*	*Role in armed forces*	*Design <1.1.55*	*Production <1.1.75*	*State of Design TC and Comments*
	Möwe Flugzeugbau	HD 156 A1	No	Same basic design as HD 153	No	No	Yes	543/SA
	Rhein Flugzeugbau	RW3-P65 &75		Ducted fan				509/SA
		FT 400, 600		Ducted fan				1057/SA
	Prof D Winter	Zaunkönig		Yes early STOL	No	Yes	Yes	TC 506/SA
	Pützer	Elster B & C	No	No	Yes	No	Yes	584/SA
	Schempp-Hirth, Stark Flugzeugbau, Binder	CP 301 series, Smaragd				Yes	Yes	564/SA 642/SA
	Schempp-Hirth	Milan GS 6a		Yes		No	Yes	561/SA
	VFW-Fokker	FW P-149D license production			Yes	No	Yes	568/SA
Hungary	SMG92 kft	Turbo-Finist						Treated as pre-TC R&D specials pending Russian TC and EASA validation (7 examples)
Italy	Aviamilano	F-14 Nibbio		Established high performance GA design		No	Yes	

Table 1 : EU states of Design; powered aircraft, fixed wing

State of Design	*Manufacturer*	*Type*	*Evaluation against Annex II criteria*					
			Historic event	*Development of Aviation*	*Role in armed forces*	*Design <1.1.55*	*Production <1.1.75*	*State of Design TC and Comments*
	Aviamilano	P-19 Scricciolo					Yes	agreed by ENAC
	Caproni-Vizzola (Antares)	C22J		Yes, light jet d'ment				A278
		F-8L Falco		Established high performance GA design		Yes	Yes	Later manufacture are amateur-built
	FIAT	CR32 Chirri			Yes	Yes	Yes	
	Fiat	G-59			Yes	Yes	Yes	
		CR42 Falco	WWII		Yes	Yes	Yes	
	Macchi	MB308				Yes	Yes	
		AL60					Yes	agreed by ENAC
	Meteor SpA	FL53 (Lombardi FL3), FL54, FL55				Yes	Yes	
	Nardi	FN333 Riviera				Yes	Yes	
	Piaggio	P149D			Yes	Yes	Yes	
		P.148				Yes	Yes	
		P.136				Yes	Yes	
	Procaer	F-15 Picchio		Established high performance GA design		No	Yes	
	SIAI-Marchetti	SM.1019			Yes			
Netherlands	Fokker	S-11			Yes	Yes	Yes	
Poland	CSS	CSS-13 (Po-2)			Yes	Yes	Yes	

Table 1 : EU states of Design; powered aircraft, fixed wing

State of Design	*Manufacturer*	*Type*	*Evaluation against Annex II criteria*					
			Historic event	*Development of Aviation*	*Role in armed forces*	*Design <1.1.55*	*Production <1.1.75*	*State of Design TC and Comments*
	HAS	Jungmann T-131 PA replica						
	Jakowlew (Yakovlev)	Jak-12			Yes	Yes	Yes	
		Jak-18			Yes	Yes	Yes	
	PZL	PZL-130 Orlik and Turbo-Orlik			Yes			
		An-2 all PZL-built variants			Yes	Yes	Yes but see note	BB-035/3/1 BB-176/1 Note: production continued until 1992
	RWD	RWD-5R replica	Yes transatlantic crossing					
	WSK Mielec/PZL	MiG-15/LIM-1 & 2	Korea		Yes	Yes	Yes	
		Mig-17/LIM-5			Yes	Yes	Yes	
		TS-8 Bies			Yes	Yes	Yes	
		TS-11 Iskra			Yes	Yes	Yes	
Romania	Aerostar	Yak-52 including tailwheel variants			Yes DOSAAF	No	No	Tailwheel variants and aircraft that have not served in DOSAAF are included
	Constructii Aeronautice	IAR-28MA						R&D

Table 1 : EU states of Design; powered aircraft, fixed wing

State of Design	*Manufacturer*	*Type*	*Evaluation against Annex II criteria*					
			Historic event	*Development of Aviation*	*Role in armed forces*	*Design <1.1.55*	*Production <1.1.75*	*State of Design TC and Comments*
		IAR-34						R&D
		IS-29 Club						R&D
	IAR Bucuresti	IAR-823			Yes	Yes	Yes	
Spain	Aerodifusion SL	Jodel/CEA D1190S				Yes	Yes	1003/63 Treated as per French D1190 series
	Hispano/CASA	HA-1.109 series			Yes	Yes	Yes	
		HA-1112-M1L Buchon			Yes	Yes	Yes	
		CASA-2.111-HE			Yes	Yes	Yes	
		Hispano HA-200			Yes	Yes	Yes	
		Hispano HA-220			Yes	Yes	Yes	
		CASA 1131 series			Yes	Yes	Yes	
		CASA 101			Yes			No TC, military aircraft
		AISA I-11B Peque		Significant to Spain		Yes	Yes	
		AISA I-115			Yes	Yes	Yes	
	Huarte Mendicoa	HM-1 various				Yes	Yes	
Sweden	Häglund & Söner	Bü180 Student			Yes	Yes	Yes	
		Bü181 Bestmann			Yes	Yes	Yes	
	Klemm	Sk15 (KL35B)			Yes	Yes	Yes	
	Saab	NA-16 variants			Yes	Yes	Yes	

Table 1 : EU states of Design; powered aircraft, fixed wing

State of Design	*Manufacturer*	*Type*	*Evaluation against Annex II criteria*					
			Historic event	*Development of Aviation*	*Role in armed forces*	*Design <1.1.55*	*Production <1.1.75*	*State of Design TC and Comments*
		Model 91 Safir variants			Yes	Yes	Yes	
		S14B (Fi-156)			Yes	Yes	Yes	
		MFI-9			Yes (Biafra)	No	Yes	
		MFI-15			Yes			
Switzerland	A. Comte	AC4	Yes	First Swissair aircraft	Yes	Yes	Yes	
	Augsburger	Roesgen EPR 301				Yes	Yes	F 02-10
	Consortium (F+W, Doflug, SWS	D-3801 (MS406)		WWII	Yes	Yes	Yes	License from Morane-Saulnier
	Dätwyler	Swiss Trainer						R&D special prototype only F33-05
	Doflug Altenrhein	Bücker 131 Jungmann	WWII	Significant for Switzerland	Yes	Yes	Yes	LBA 717
		Bücker 131 APM				Yes	Yes	F13-09 Annex II on the basis of all other Bü131s
		Bücker 133 Jungmeister	WWII	Significant for Switzerland	Yes	Yes	Yes	LBA 582
	FFA Altenrhein	AS202/32TP						R&D special prototype only F72-06

Table 1 : EU states of Design; powered aircraft, fixed wing

State of Design	*Manufacturer*	*Type*	*Evaluation against Annex II criteria*					
			Historic event	*Development of Aviation*	*Role in armed forces*	*Design <1.1.55*	*Production <1.1.75*	*State of Design TC and Comments*
	F+W Emmen (license from DH)	DH-100 Mk 6 Vampire			Yes	Yes	Yes	
		DH-115 Mk 55 Vampire Trainer			Yes	Yes	Yes	
		DH-112 Mk1 and Mk 4 Venom			Yes	Yes	Yes	
	F+W Emmen	C-3603	WWII	Significant for Switzerland	Yes	Yes	Yes	
		C-3605			Yes	Yes	Yes	
	K+W Thun	Dewoitine D-26			Yes	Yes	Yes	License from Dewoitine
	Pilatus	P-2		Significant for Switzerland	Yes	Yes	Yes	
		P-3	Yes	Significant for Switzerland	Yes	Yes	Yes	
		PC-7			Yes			F 56-20
		PC-7 Mk II			Yes			F 56-25
		PC-9			Yes			F 56-22
		PC-9(M)			Yes			F 56-32
		PC-21			Yes			F 56-35
	Walter Uetz Flugzeugbau	Jodel D11				Yes	Yes	570B French SoD – Swiss built; Annex II for France

Table 1 : EU states of Design; powered aircraft, fixed wing

State of Design	*Manufacturer*	*Type*	*Evaluation against Annex II criteria*					
			Historic event	*Development of Aviation*	*Role in armed forces*	*Design <1.1.55*	*Production <1.1.75*	*State of Design TC and Comments*
	Walter Uetz Flugzeugbau	CEA/U2V				Yes	Yes	On basis of similarity with Jodel series
UK	ATL	ATL 98 Carvair		Yes			Yes	Development of Annex II DC-4
	Auster	AOP series			Yes	Yes	Yes	
		All other series				Yes	Yes	
	Avro	19/Anson	WWII		Yes	Yes	Yes	
		Tutor			Yes	Yes	Yes	
		Lancaster	WWII		Yes	Yes	Yes	
		Vulcan			Yes	Yes	Yes	
		504 all variants	WWI		Yes	Yes	Yes	
	Avro-Cierva	C30				Yes	Yes	
	British Aircraft	BA Swallow 2				Yes	Yes	
		Eagle				Yes	Yes	
	BAC/BAE	BAC 167 Strikemaster			Yes	Yes	Yes	
	Beagle	B206 Bassett			Yes	Yes	Yes	
		A109 Airedale		Yes		See note	Yes	Regarded as a development of the Auster series
	Beagle/Beagle-Auster	A61 series 2				Yes	Yes	Regarded as a direct development of Auster series

Table 1 : EU states of Design; powered aircraft, fixed wing

State of Design	*Manufacturer*	*Type*	*Evaluation against Annex II criteria*					
			Historic event	*Development of Aviation*	*Role in armed forces*	*Design <1.1.55*	*Production <1.1.75*	*State of Design TC and Comments*
	Beagle-Auster	D5				Yes	Yes	
	Bristol	F2B Fighter	WWI		Yes	Yes	Yes	
		M1C replica			Yes	Yes	Yes	
		Blenheim & Bolingbroke	WWII		Yes	Yes	Yes	
		Beaufighter	WWII		Yes	Yes	Yes	
		170 Freighter & Wayfarer			(Yes)	Yes	Yes	
	Chrislea	Super Ace				Yes	Yes	
	Comper	Swift				Yes	Yes	
	De Havilland	DH82 Tiger Moth	WWII		Yes	Yes	Yes	
		All pre-1955 types; 51, 53, 60, 80, 83, 84, 87, 90				Yes	Yes	
		DHC-1 Chipmunk all marks (UK built)			Yes	Yes	Yes	
		DH88 Comet racer	UK to Australia	Yes		Yes	Yes	
		Vampire all marks		Yes	Yes	Yes	Yes	
		Venom all marks		Yes	Yes	Yes	Yes	
		Mosquito	WWII	Yes	Yes	Yes	Yes	
		DH89 Dominie			Yes	Yes	Yes	
		Devon/Sea Devon/Dove			Yes	Yes	Yes	
		Sea Heron/Heron			Yes	Yes	Yes	

Table 1 : EU states of Design; powered aircraft, fixed wing

State of Design	*Manufacturer*	*Type*	*Evaluation against Annex II criteria*					
			Historic event	*Development of Aviation*	*Role in armed forces*	*Design <1.1.55*	*Production <1.1.75*	*State of Design TC and Comments*
		Sea Vixen FAW2			Yes	Yes	Yes	
	Edgar Percival	EP9 Prospector				Yes	Yes	
	English Electric	Canberra all marks		Yes	Yes	Yes	Yes	
	Fairey	Swordfish	WWII		Yes	Yes	Yes	
		Firefly	WWII/ Korea		Yes	Yes	Yes	
	FLS Aerospace	FLS Sprint 160 s/n 001						s/n 001 only R&D
	Folland	Gnat			Yes	Yes	Yes	
	Garland	Linnet series (Emeraude license-build)				Yes	Yes	Annex II on the basis of the original French design
	Gloster	Gauntlet			Yes	Yes	Yes	Finland
		Gladiator	WWII		Yes	Yes	Yes	
		Meteor all marks	Korea		WWII		Yes	
	Hawker	Hurricane all marks	WWII	Yes	Yes	Yes	Yes	
		Tomtit			Yes	Yes	Yes	
		Fury			Yes	Yes	Yes	
		Demon/Hart all series			Yes	Yes	Yes	
		Nimrod			Yes	Yes	Yes	
		Sea Fury	Korea		Yes	Yes	Yes	
		Hunter all marks			Yes	Yes	Yes	
		Sea Hawk			Yes	Yes	Yes	

Table 1 : EU states of Design; powered aircraft, fixed wing

State of Design	*Manufacturer*	*Type*	*Evaluation against Annex II criteria*					
			Historic event	*Development of Aviation*	*Role in armed forces*	*Design <1.1.55*	*Production <1.1.75*	*State of Design TC and Comments*
		Tempest II	WWII		Yes	Yes	Yes	
		Cygnet				Yes	Yes	
	Miles	Gemini				Yes	Yes	
		Magister	WWII		Yes	Yes	Yes	
		Messenger	WWII		Yes	Yes	Yes	
		All pre-1955 models				Yes	Yes	
		M28				Yes	Yes	
		Falcon				Yes	Yes	
	Nipper Aircraft Ltd (Slingsby)	T-66 Nipper				Yes	Yes	
	NAC	NAC-1 Freelance						Development prototype
	NDN	NDN-1 and NDN-1T Firecracker						Development prototypes
	Percival	P40 Prentice			Yes	Yes	Yes	
		Proctor series			Yes	Yes	Yes	
		Vega Gull	Jean Batten			Yes	Yes	
		Provost T Mk1 (piston)			Yes	Yes	Yes	
		Jet provost all variants			Yes	Yes	Yes	
		Pembroke			Yes	Yes	Yes	
		Sea Prince			Yes	Yes	Yes	
		Falcon				Yes	Yes	
	Rollason	Turbulent				Yes	Yes	

Table 1 : EU states of Design; powered aircraft, fixed wing

State of Design	*Manufacturer*	*Type*	*Evaluation against Annex II criteria*					
			Historic event	*Development of Aviation*	*Role in armed forces*	*Design <1.1.55*	*Production <1.1.75*	*State of Design TC and Comments*
		Beta	Yes	Yes			Yes	Some amateur-built
		D62 Condor series				Yes	Yes	
	Royal Aircraft Factory	SE5A	WWI		Yes	Yes	Yes	Including Slingsby-built replicas
	Scottish Aviation	Twin Pioneer			Yes	Yes	Yes	
		Bulldog			Yes	Yes	Yes	
	Somers-Kendall	SK-1		Yes		Yes	Yes	
	Sopwith	Camel	WWI		Yes	Yes	Yes	
		Pup/Dove	WWI		Yes	Yes	Yes	
		Triplane	WWI		Yes	Yes	Yes	
	Supermarine	Spitfire all marks	WWII		Yes	Yes	Yes	
		Walrus	WWII		Yes	Yes	Yes	
	Thruxton	Jackaroo				Yes	Yes	
	Vickers	Vimy replica	Atlantic crossing etc			Yes		
	Westland	Lysander	WWII		Yes			

Table 2 : Non-EU states of Design; powered aircraft, fixed wing

State of Design	Manufacturer	Type	Evaluation against Annex II criteria					
			Historic event	Development of Aviation	Role in armed forces	Design <1.1.55	Production <1.1.75	State of Design TC and Comments
Canada	Canadian Car & Foundry	Harvard series	WWII		Yes	Yes	Yes	A-80
	De Havilland Canada	DHC-1 Chipmunk			Yes	Yes	Yes	A-19
		DHC-2 Beaver Mk I and II, L-20 (Viking Air)			Yes	Yes	Yes	A-22. DHC-2 Mk III Turbo Beaver is not Annex II.
		DHC-3 Otter (Viking Air)			Yes	Yes	Yes	A-27
	Fleet	All models				Yes	Yes	See Consolidated-Fleet (USA)
China	Shenyang	CJ-6			Yes			
CIS	Antonov	An-2			Yes	Yes	Yes	Russian-built aircraft, not PZL; orphan.
		An-12			Yes			Agreed with IAC
	Ilyushin	Il-2	WWII		Yes	Yes	Yes	
		Il-76			Yes			
	Lavochkin	La-9	WWII		Yes	Yes	Yes	
		La-11	Korea		Yes	Yes	Yes	
	Mig	MiG-15 series	Korea	Yes	Yes	Yes	Yes	
	Polikarpov	Po-2 all variants			Yes	Yes	Yes	
		I-16			Yes	Yes	Yes	
		I-153			Yes	Yes	Yes	
	Yakovlev	Yak 1	WWII		Yes	Yes	Yes	
		Yak 3 and replicas	WWII		Yes	Yes	Yes	
		Yak 9 series	WWII		Yes	Yes	Yes	
		Yak-11			Yes	Yes	Yes	

Table 2 : Non-EU states of Design; powered aircraft, fixed wing

State of Design	Manufacturer	Type	Evaluation against Annex II criteria					
			Historic event	Development of Aviation	Role in armed forces	Design <1.1.55	Production <1.1.75	State of Design TC and Comments
		Yak-12			Yes	Yes	Yes	
		Yak 18 all marks except 18T			Yes	Yes	Yes	Yak 18T is a different design from all other Yak-18s
		Yak-50			Yes DOSAAF			
		Yak 52 (see Aerostar Romania)			Yes DOSAAF			
USA	Aero Design	520				Yes	Yes	Other Twin Commander types are EASA aircraft
	Aeronca	C-2				Yes	Yes	A-351, 448
		C-3 & 100				Yes	Yes	A-396
		Model K Scout				Yes	Yes	A-676, 688
		11 series				Yes	Yes	A-761 A-796
		7 series (see entry for American Champion below to see affected models)				Yes	Yes	A-759
		L-3 and O-58			Yes	Yes	Yes	A-751
		L-16B			Yes	Yes	Yes	A-759
		Sedan Model 15				Yes	Yes	A-802
		Model 40 Chief				Yes	Yes	
		Model 50 Chief				Yes	Yes	A-688, 676, 728
		Model 65 Super Chief, YO-58, L-3				Yes	Yes	A-728
		TC-65 Grasshopper			Yes	Yes	Yes	A-728
	Beech	C45 series			Yes	Yes	Yes	A-765
		AT-11			Yes	Yes	Yes	

Table 2 : Non-EU states of Design; powered aircraft, fixed wing

State of Design	Manufacturer	Type	Evaluation against Annex II criteria					
			Historic event	Development of Aviation	Role in armed forces	Design <1.1.55	Production <1.1.75	State of Design TC and Comments
		L-23 Seminole			Yes	Yes	Yes	5A4
		17 Staggerwing & UC-43B			Yes	Yes	Yes	ATC-560 ATC-602 ATC-604 TC-713 TC-638 A-649 TC-779
		T-34 Mentor and Model 45			Yes	Yes	Yes	A26CE 5A3
		18 series, all variants				Yes	Yes	TC-630 A-684 TC-710 A-757 A-765
		Model 35 Bonanza V-tail variants: 35, A35, B35, C35, D35, E35, F35, G35, 35R				Yes	Yes	A-777; models TC'd to 3A15 are not Annex II.
	Bell	P-39 Airacobra	WWII		Yes	Yes	Yes	
		P-63 Kingcobra	WWII		Yes	Yes	Yes	LTC-21
	Bellanca	Model 14 series				Yes	Yes	A-773
	Boeing	B-17 Flying Fortress	WWII		Yes	Yes	Yes	
		Stearman A75, E75, etc series	WWII		Yes	Yes	Yes	A-743

Table 2 : Non-EU states of Design; powered aircraft, fixed wing

State of Design	Manufacturer	Type	Evaluation against Annex II criteria					
			Historic event	Development of Aviation	Role in armed forces	Design <1.1.55	Production <1.1.75	State of Design TC and Comments
	Cessna	L-19 (O-1A) Model 305 Bird dog series (now Regal Air 305)			Yes	Yes	Yes	5A5 3A14
		T-50 Bobcat			Yes	Yes	Yes	A-722
		U-3 (C310)			Yes	Yes	Yes	3A10
		120 series				Yes	Yes	A-768
		140 series				Yes	Yes	5A2 A-768
		170 series				Yes	Yes	A-799
		190 & 195 series, LC-126			Yes	Yes	Yes	A-790
	Champion, American	11 series				Yes	Yes	A-761 A-796
		7 series as follows: 7ECA w/ 108 HP Lycoming (O-235-C1) Fixed Pitch Sensenich 7GCAA w/ 150 HP Lycoming Fixed Pitch Sensenich or McCauley Propeller				Yes	Yes but see note	A-759 Production of some models continued to 1980 but listed as Annex II to avoid s/n split.

Table 2 : Non-EU states of Design; powered aircraft, fixed wing

State of Design	Manufacturer	Type	Evaluation against Annex II criteria					
			Historic event	Development of Aviation	Role in armed forces	Design <1.1.55	Production <1.1.75	State of Design TC and Comments
		7GCBC w/ 150 HP Lycoming Fixed Pitch Sensenich or McCauley Propeller 7KCAB w/ 150 HP Lycoming Fixed Pitch Sensenich or McCauley Propeller						
		7 series as follows: 7ECA w/100HP Continental O200A/McCauley propeller 7EC w/90HP Continental and 1300, 1450 or 1500 lbs gross weight 7AC, 7ACA, S7AC, 7BCM, 7CCM, 7DC, S7DC, S7EC, 7FC, 7GC, 7GCA, 7GCB, 7GCBA, 7HC, 7JC, 7KC				Yes	Yes	A-759

Table 2 : Non-EU states of Design; powered aircraft, fixed wing

State of Design	Manufacturer	Type	Evaluation against Annex II criteria					
			Historic event	Development of Aviation	Role in armed forces	Design <1.1.55	Production <1.1.75	State of Design TC and Comments
	Commonwealth Rearwin	185				Yes	Yes	
	Consolidated	Fleet series				Yes	Yes	
	Convair	Sentinel L-5			Yes	Yes	Yes	A-764
		PBY-5 Catalina			Yes	Yes	Yes	TC A-785
	Curtiss	P-40 series	WWII		Yes	Yes	Yes	
		C-46	WWII		Yes	Yes	Yes	2A5
		Hawk 75 (P-36)	WWII		Yes	Yes	Yes	
		Wright CW-1	WWII		Yes	Yes	Yes	
	Douglas	C-47 (DC-3)	WWII	Yes	Yes	Yes	Yes	A-618 A-669
		DC-4/C-54		Yes	Yes	Yes	Yes	A-762
		DC-6		Yes	Yes	Yes	Yes	A-781
		DC-7		Yes		Yes	Yes	4A10
		AD Skyraider	Korea		Yes	Yes	Yes	
	ERCO, Saunders, Univair, Forney, Fornaire, Air Products, Alon,	Ercoupe 415 series, F-1 Forney, Alon A-2, Mooney A2				Yes	Yes	A-787 A-718
	Fairchild	Model 24 UC-61 Forwarder			Yes	Yes	Yes	A-706 A-707
		PT-19A	WWII		Yes	Yes	Yes	
		M-62 Cornell (PT-26)	WWII		Yes	Yes	Yes	
		24 series				Yes	Yes	A-535 A-706 A-707
	Globe, Globe Universal	CG-1A and B				Yes	Yes	

Table 2 : Non-EU states of Design; powered aircraft, fixed wing

State of Design	Manufacturer	Type	Evaluation against Annex II criteria					
			Historic event	Development of Aviation	Role in armed forces	Design <1.1.55	Production <1.1.75	State of Design TC and Comments
	Great Lakes	2T-1A-1 and 2				Yes	Yes	Although limited production occurred after 1975
	Grumman	F3F replicas			Yes	Yes	Yes	
		F4F Wildcat	WWII		Yes	Yes	Yes	
		F6F Hellcat	WWII		Yes	Yes	Yes	
		F8F Bearcat	Korea		Yes	Yes	Yes	LTC-23
		F7F Tigercat	Korea		Yes	Yes	Yes	
		TBM Avenger	WWII		Yes	Yes	Yes	
		G-21 Goose	WWII		Yes	Yes	Yes	TC-654
		G-44 Widgeon	WWII		Yes	Yes	Yes	A-734
		G-73 Mallard				Yes	Yes	A-783
	Lake	C1 and C2				Yes	Yes	
		LA-4				Ye	Yes	
	Lockheed	Constellation		Yes				6A5 A-763
		10 Electra				Yes	Yes	A-551 A-584
		12			Yes	Yes	Yes	TC-616
		P-38	WWII					LTC-10
		T-33		Early jet	Yes	Yes	Yes	
	Luscombe	8 series and Silvaire		Yes		Yes	Yes	A-694
		11 series Silvaire Sedan				Yes	Yes	A-804
	Mooney	M18 Mite				Yes	Yes	A-803
	Naval Aircraft Factory	N3N-3			Yes	Yes	Yes	A-2-569
	North American	Texan/Harvard AT6, T6, SNJ etc series	WWII		Yes	Yes	Yes	A-2-575

Table 2 : Non-EU states of Design; powered aircraft, fixed wing

State of Design	Manufacturer	Type	Evaluation against Annex II criteria					
			Historic event	Development of Aviation	Role in armed forces	Design <1.1.55	Production <1.1.75	State of Design TC and Comments
		T-28			Yes	Yes	Yes	
		NA-62			Yes	Yes	Yes	
		NA-68	WWII		Yes	Yes	Yes	
		F-86 Sabre	Korea	Yes	Yes	Yes	Yes	
		OV-10	Vietnam		Yes	Yes	Yes	
		P-51 Mustang all marks	WWII	Yes	Yes	Yes	Yes	
		B-25 Mitchell all marks	WWII					
		Navion series				Yes	Yes	A-782
	Piper	L-4 series			Yes	Yes	Yes	A-691 A-692 A-698 A-740
		L-18 series			Yes	Yes	Yes	1A2
		L-21 series			Yes	Yes	Yes	1A2
		J-2		Yes		Yes	Yes	
		J-3 series including postwar production		Yes		Yes	Yes	A-691 A-692 A-698 A-740
		Stinson 108 Voyager				Yes	Yes	A-767
		PA-11 Cub Special				Yes	Yes	A-691
		PA-12 Super Cruiser & 14 Family Cruiser				Yes	Yes	A-780 A-797
		PA-15, 17 Vagabond and PA-16 Clipper				Yes	Yes	A-800 A-805

Table 2 : Non-EU states of Design; powered aircraft, fixed wing

State of Design	Manufacturer	Type	Evaluation against Annex II criteria					
			Historic event	Development of Aviation	Role in armed forces	Design <1.1.55	Production <1.1.75	State of Design TC and Comments
		PA-16				Yes	Yes	1A1
		Piper J5A				Yes	Yes	1A2
		PA-18 & 19 Super Cub				Yes	Yes But see note	1A2 Production carried on beyond 1975 in small numbers but for consistency all Cubs and Super Cubs are regarded as Annex II
		PA-20 Pacer, 22 Tri-Pacer				Yes	Yes	1A4 1A6
		Piper PA-23 Piper PA-23-160 Apache				Yes	Yes	1A10 but Aztec models are not Annex II: PA-23-235 PA-23-250 PA-E23-250
	Republic	P-47 Thunderbolt series	WWII		Yes	Yes	Yes	
		RC-3 Seabee				Yes	Yes	A-769
	Ryan	ST series, PT-16	WWII		Yes	Yes	Yes	
		PT-21, 22 series	WWII		Yes	Yes	Yes	
	Stinson	V-77		Pre-1939		Yes	Yes	A-774
		108 series				Yes	Yes	
		Reliant SR1 to SR10 series				Yes	Yes	
		L-5 series; U-19, O-62, OY-1			Yes	Yes	Yes	A-274
	Taylorcraft	A, B, C, D models, 15, 18, 19, L-series			(Yes)	Yes	Yes	A-643 A-696

Table 2 : Non-EU states of Design; powered aircraft, fixed wing

State of Design	Manufacturer	Type	Evaluation against Annex II criteria					
			Historic event	Development of Aviation	Role in armed forces	Design <1.1.55	Production <1.1.75	State of Design TC and Comments
								A-699 A-700
	Vought, Chance-Vought	F4U Corsair series	WWII		Yes	Yes	Yes	
	WACO	UPF-7	WWII		Yes	Yes	Yes	A-642
Yugoslavia	Soko	522			Yes	Yes	Yes	
		J-20 Kraguj			Yes	Yes	Yes	
	UTVA	66-F			Yes	Yes	Yes	
		Aero 3-F			Yes	Yes	Yes	

Table 3 : Sailplanes and Powered Sailplanes (EU and non-EU)

State of Design	Manufacturer	Type	Evaluation against Annex II criteria					
			Historic event	Development of Aviation	Role in armed forces	Design <1.1.55	Production <1.1.75	State of Design TC and Comments
Austria	Akaflieg Wien	AFW-8				Yes	Yes	Yes
	Oberlerchner	Mg19 Series				Yes	Yes	SF15/92
	Oberlerchner	Gb II Edelweiss				Yes	Yes	
	Oberlerchner	Mg23 Series				Yes	Yes	25.717-6/62
	Oberlerchner	AV36				Yes	Yes	Lizenz Fauvel
	Spilka Wettstein	L-Spatz W				Yes	Yes	
	Zentralwerkstätte Österr. Aeroclub	Standard Austria				Yes	Yes	L-230
Czech Republic	All sailplanes that first flew before 1955	Including Z-23, Z-25, Z-125, 425, Sohaj all marks, VT-109 LF-107, VT-16, 116 etc		Yes				
Finland	sailplanes	All sailplanes designed before 1955, manufactured before 1975				Yes	Yes	
France	Arsenal de l'aeronautique	Arsenal 4111				Yes	Yes	TCDS 108
	Avialsa	CR A 60 Fauconnet				Yes	Yes (prod'n finally stopped in 1978 but	Copy of Mü13E (Annex II) TCDS 67, TC 19
	Breguet	900				Yes	Yes	TCDS 37
		901 series				Yes	Yes	TCDS 74
		901 S series				Yes	Yes	TCDS 37
	Fauvel	All AV series sailplanes		Tail-less sailplanes				

Table 3 : Sailplanes and Powered Sailplanes (EU and non-EU)

State of Design	Manufacturer	Type	Evaluation against Annex II criteria					
			Historic event	Development of Aviation	Role in armed forces	Design <1.1.55	Production <1.1.75	State of Design TC and Comments
	Nord/SNCAN	1300/2000						TCDS 41 -1947
		C-800				Yes	Yes	Originally Caudron
Germany	Akaflieg Darmstadt	D 34 c					Yes	169 Amateur-built
		D 34 d					Yes	169 AB
	Akaflieg München	Mü 17				Yes	Yes	72 Amateur-built
		Mü 22				Yes	Yes	141 Amateur-built
		Mü 22 b						141 Amateur-built
	Apparatebau Lommatzsch	LOM Libelle 57/58		Yes			Yes	228
		FES 530/I, 530/II Lehrmeister				Yes	Yes	421
		LOM 61 Favorit		Yes			Yes	422
		Grunau 9				Yes	Yes	10 Amateur-built
		Grunau SG-38		Yes		Yes	Yes	14 Amateur-built
		Zögling 12 m				Yes	Yes	11
		Kranich II				Yes	Yes	30
		Rhönsperber				Yes	Yes	51
		Habicht E				Yes	Yes	53
		Baby III				Yes	Yes	66
		Hü 17b				Yes	Yes	116
	Atze Ahrens	Lüty Ly-532				Yes	Yes	157 Amateur-built
		Lüty Ly-542 K				Yes	Yes	202 Amateur-built
	E. Bruns	Ka 8B/Stihl					Yes	670 Exp
		Ka 6/Stihl					Yes	692 Exp
		L-Spatz 55/Stihl					Yes	694 Exp
		L-Spatz III/Stihl					Yes	694 Exp

Table 3 : Sailplanes and Powered Sailplanes (EU and non-EU)

State of Design	Manufacturer	Type	Evaluation against Annex II criteria					
			Historic event	Development of Aviation	Role in armed forces	Design <1.1.55	Production <1.1.75	State of Design TC and Comments
	Edmund Schneider	Grunau Baby II b		Yes		Yes	Yes	49
	Fa. Bitz	L 10 "Libelle"					Yes	208 Exp
	F.B. Schmetz	Condor IV/2				Yes	Yes	115
		HKS 1				Yes	Yes	143
		HKS 3		Yes		Yes	Yes	200 Experimental
	Fichtel & Sachs	K8B/KM 48					Yes	691 Exp
	Flugzeugbau Köhler-Peters	Sp 1-0				Yes	Yes	162
		Sp 1-V				Yes	Yes	162 Experimental
	Focke-Wulf	Weihe 50				Yes	Yes	68
		Olympia Meise 51				Yes	Yes	70
		Kranich II				Yes	Yes	111
		Kranich III				Yes	Yes	111
	Fritz Raab	Doppelraab IV				Yes	Yes	101
		Doppelraab V				Yes	Yes	101
		Doppelraab VI				Yes	Yes	101
	Greif Flugzeugbau	Greif I				Yes	Yes	148
	Heini Dittmar	Condor IV		Yes		Yes	Yes	115
	Herbert Gomolzig	Grunau Baby V				Yes	Yes	160 Experimental
	Ing. A. Vogt	Lo 100				Yes	Yes	129
		Lo 150				Yes	Yes	167
	LSG Wolfenbüttel	Cumulus Cu-IIF				Yes	Yes	103 Amateur-built
		Cumulus Cu-IIIF				Yes	Yes	103 Amateur-built
	Möwe Flugzeugbau	HD 53				Yes	Yes	142
	Rheintalwerke G. Basten	Greif II					Yes	224 Exp
	Rudolf Kaiser	Ka 1		Yes		Yes	Yes	118

Table 3 : Sailplanes and Powered Sailplanes (EU and non-EU)

State of Design	Manufacturer	Type	Evaluation against Annex II criteria					
			Historic event	Development of Aviation	Role in armed forces	Design <1.1.55	Production <1.1.75	State of Design TC and Comments
	Scheibe Flugzeugbau	Mü 13 D				Yes	Yes	63
		Mü 13 E				Yes	Yes	104
		LCF 2						289 Amateur-built
		SF 24 A "Motorspatz I"					Yes	581 Experimental
		SF 24 B "Motorspatz I"					Yes	581 Experimental
		SF 27 M-A					Yes	678 Experimental
		Specht				Yes	Yes	138
	Schempp-Hirth	Gö3 "Minimoa"		Yes		Yes	Yes	59
		Hütter H-17aS				Yes	Yes	67
	Schleicher	Rhönbussard				Yes	Yes	50
		ES 49				Yes	Yes	102
		Condor IV/3				Yes	Yes	115
		Rhönlerche I				Yes	Yes	163
		Rhönlerche II				Yes	Yes	164
		Ka 2 / Ka 2b				Yes	Yes	140/203
		Ka 3				Yes	Yes	154
		K 11					Yes	668 Experimental
	Segelflugzeugbau Rock & Co	Geier II					Yes	175 Exp
		Geier II B					Yes	175 Exp
		Doppelraab 7				Yes	Yes	101
		K 12					Yes	684 Experimental
	Siebert	Sie 3						
	VEB	Grunau Baby II b -DDR				Yes	Yes	49
	Wolf Hirth	Goevier III		Yes		Yes	Yes	112
		Hi 25 "Kria"						210 Experimental

Table 3 : Sailplanes and Powered Sailplanes (EU and non-EU)

State of Design	Manufacturer	Type	Evaluation against Annex II criteria					
			Historic event	Development of Aviation	Role in armed forces	Design <1.1.55	Production <1.1.75	State of Design TC and Comments
Italy	Caproni (Antares)	A21SJCalif		Yes, Jet-powered sailplane				A 278
	Sailplanes	All sailplanes designed before 1955, manufactured before 1975		Established modern sailplane design				
Hungary		Z 03 Ifjusag				Yes	Yes	
		R-22 series, Futar, Super Futar, etc				Yes	Yes	
Netherlands	Fokker	Baby				Yes	Yes	
		ESG				Yes	Yes	
		Go-4				Yes	Yes	
		Olympia				Yes	Yes	
	NV Vliegtuigbouw Deventer	Bauling Baby				Yes	Yes	
		Sagitta				-	Yes	
		V-20				Yes	Yes	
	Zweefvliegtuigbouw Terlet	Zugling				Yes	Yes	
Poland	PZL-Bielsko	All sailplanes including up to PZL-Bielsko SZD-		Established modern		Yes	Yes	
		SZD-31 Zefir 4						Development/prototypes
		SZD-35 Bekas						Development/prototypes
		SZD-39 Cobra 17						Development/prototypes

Table 3 : Sailplanes and Powered Sailplanes (EU and non-EU)

State of Design	Manufacturer	Type	Evaluation against Annex II criteria					
			Historic event	Development of Aviation	Role in armed forces	Design <1.1.55	Production <1.1.75	State of Design TC and Comments
		SZD-40X Halny						Development/prototypes
		SZD-41 Jantar Standard						Development/prototypes
		SZD-50-1M						Development/prototypes
		SZD-51-0 Junior						Development/prototypes
		SZD-52-0 Jantar 15						Development/prototypes
		SZD-52-1 Jantar 15S						Development/prototypes
Switzerland	August Hug	Spyr 4				Yes	Yes	S 30-02
		Spyr 5				Yes	Yes	S 30-04
		Spyr 5A				Yes	Yes	S 30-06
	Karpf Segelflugzeugbau	Grunau GB II				Yes	Yes	S 57-02
		Zögling				Yes	Yes	S 57-04
		Karpf Baby				Yes	Yes	S 57-06
	Moswey-Werke	Moswey II... series				Yes	Yes	S 38-02
		Moswey III... series				Yes	Yes	S 38-04
		Moswey IV... series				Yes	Yes	S 38-06
	A. Neukom	Elfe Top series						Prototype; none on register M39-06
	Spalinger	S 16... series				Yes	Yes	S 63-04
		S 18... series				Yes	Yes	S 63-08
		S 19... series				Yes	Yes	S 63-10
		S 22... series				Yes	Yes	S 63-14
		S 25... series				Yes	Yes	S 63-16

Table 3 : Sailplanes and Powered Sailplanes (EU and non-EU)

State of Design	Manufacturer	Type	Evaluation against Annex II criteria					
			Historic event	Development of Aviation	Role in armed forces	Design <1.1.55	Production <1.1.75	State of Design TC and Comments
		S 21... series				Yes	Yes	S 63-21
		WLM-... series				Yes	Yes	S 69-04
USA	Schweitzer	1-26, 2-32, 2-33				Yes	Yes	
UK	Abbott-Baynes	All sailplanes		Yes		Yes	Yes	
	Birmingham Guild	BG135		Yes				Regarded as development aircraft
	Elliots of Newbury (EON)	Olympia	Yes	Yes		Yes	Yes	Also see Olympia Meise
	Shenstone	Harbinger				Yes	Yes	
	Slingsby	All models up to and including T50				Yes	Yes	
	Swales	SD3				No	No	Prototype only

Table 4 : Rotorcraft (EU and non-EU)

State of Design	Manufacturer	Type	Evaluation against Annex II criteria					
			Historic event	Development of Aviation	Role in armed forces	Design <1.1.55	Production <1.1.75	State of Design TC and Comments
France	SNCASO (Eurocopter)	SO 1221 PS Djinn		Yes		Yes	Yes	TCDS 102
	Sud Aviation	SE 313, SE3130 Alouette II		YES (1st turbine rotorcraft)	yes	yes	yes	
Germany	J. Wagner Helicopter-Technik	FJ-SKY-TRAC		Yes				3022/RC
Italy	Agusta-Bell	AB 47 all variants				Yes	Yes	A85, 86, 113, 114, 100, 112, 115, 125, 148, A88, A99/A127, A103, A110,
Poland	PZL Swidnik	Mi-2		Yes	Yes			(CAO) BC-073
		Mi-2 Plus		Yes	Yes			(CAO) BC-073
Russia	Mil	Mi-8, Mi8T, Mi-8 MTV		Yes	Yes			RF Ministry of Transport Attestat
UK	Bristol Aircraft	Belvedere			Yes	Yes		
		Sycamore			Yes	Yes	Yes	
	Saunders-Roe	Skeeter			Yes	Yes	Yes	
		Scout			Yes			
	Westland	S55 Whirlwind			Yes	Yes	Yes	
		Wessex			Yes	Yes	Yes	
		Scout			Yes			
		Wasp			Yes			
		Gazelle			Yes			

Table 4 : Rotorcraft (EU and non-EU)

State of Design	Manufacturer	Type	Evaluation against Annex II criteria					
			Historic event	Development of Aviation	Role in armed forces	Design <1.1.55	Production <1.1.75	State of Design TC and Comments
		S51 Dragonfly			Yes	Yes	Yes	
		Mk 60 Wessex			Yes			
		W30, 30-100, 30-100-60						TC Revoked
	Westland-Bell	47 variants			Yes	Yes	Yes	
USA/Canada	Bell	Model 47			Yes			H-1 2H-1 2H3
		Cobra TAH-IF			Yes			Surplus Replica
		OH-58 Kiowa			Yes			
	Bell (including Dornier)	UH-1 series			Yes	Yes	Yes	
	Hiller, Fairchild-Hiller	UH-12, OH-23 series			Yes	Yes	Yes	4H11, 6H1, 6H2, 4H10, H1WE
	Sikorsky	S-55, S-55B, S-55C piston-engined variants			Yes	Yes	Yes	1H4
	Sikorsky	S-58A, B, C, D, E, F, G, H, J piston-engined variants			Yes	Yes	Yes	1H11

Table 5 : Balloons and Airships (EU and non-EU)

State of Design	Manufacturer	Type	Evaluation against Annex II criteria					
			Historic event	Development of Aviation	Role in armed forces	Design <1.1.55	Production <1.1.75	State of Design TC and Comments
Germany	ZLT	Zeppelin LZ N07 (Airship)	Yes	Yes	No	No	No	LBA 9004; type transferred; only one modified prototype (S/N 1), equipped for scientific missions not transferred
Czech Republic	Balóny Kubíček	AV-1, AV-2 (Hot Air Airship)	No	No	No	No	No	Two for "Experimental" purposes, no TC issued
France	Deveque	RD 700 (gas balloon)	Designed for Gordon Bennet Cup					TCDS 150, TC 77 (1985)
Russia	Intervavia	61TA	No	No	No	No	No	Initially registered as experimental homebuilt. No TC issued
		70TA	No	No	No	No	No	
		80TA	No	No	No	No	No	
	A/S Dirizhalstroy	DS-AT8	No	No	No	No	No	Initially registered and evaluated as amateur-built. No TC issued.
Switzerland	Ballonfabrik Bronschhofen	BFB series				No	No	B 01-01 proposed for Annex II by FOCA
UK	Thunder	O-5 Hot-Air Balloon		Yes				prototype

Table 5 : Balloons and Airships (EU and non-EU)

State of Design	Manufacturer	Type	Evaluation against Annex II criteria					
			Historic event	Development of Aviation	Role in armed forces	Design <1.1.55	Production <1.1.75	State of Design TC and Comments
		AS-33 Hot Air Airship		Yes				prototype
	Flying Pictures	Apoly 1 44000	Yes	Yes				prototype
	Western Balloons	20 Balloon		Yes			Yes	prototype
		O-31 Balloon		Yes			Yes	prototype
		O-65 Balloon		Yes			Yes	

New ANNEX II from revision to Regulation 1592/2002
ANNEX II

Aircraft referred to in Article 4(2) of Regulation 1592/2002 (to be replaced)

Article 4(1), (1a) and (1b) do not apply to aircraft falling in one or more of the categories set out below:

(a) historic aircraft meeting the criteria below:
(i) non complex aircraft whose:
- initial design was established before 1.1.1955 and
- production has been stopped before 1.1.1975.

or
(ii) aircraft having a clear historical relevance, related to:
- a participation in a noteworthy historical event; or
- a major step in the development of aviation; or
- a major role played into the armed forces of a Member State.

(b) aircraft specifically designed or modified for research, experimental or scientific purposes, and likely to be produced in very limited

(c) aircraft of which at least 51 % is built by an amateur, or a non-profit making association of amateurs, for their own purposes and without

(d) aircraft that have been in the service of military forces, unless the aircraft is of a type for which a design standard has been adopted by

(e) aeroplanes, helicopters and powered parachutes having no more than two seats, a maximum take-off mass (MTOM), as recorded by the
(i) 300 kg for a land plane/helicopter, single-seater; or
(ii) 450 kg for a land plane/helicopter, two-seater; or
(iii) 330 kg for an amphibian or floatplane/helicopter single-seater; or
(iv) 495 kg for an amphibian or floatplane/helicopter two-seater, provided that, where operating both as a floatplane/helicopter and as
(v) 472.5 kg for a land plane, two-seater equipped with an airframe mounted total recovery parachute system;
(vi) 315 kg for a land plane single-seater equipped with an airframe mounted total recovery parachute system;
and, for aeroplanes, having the stall speed or the minimum steady flight speed in landing configuration not exceeding 35 knots

(f) single and two-seater gyroplanes with a maximum take off mass not exceeding 560 kg;

(g) gliders with a maximum empty mass, of no more than 80kg when single-seater or 100kg when two-seater, including those which are foot

(h) replicas of aircraft meeting the criteria of (a) or (d) above, for which the structural design is similar to the original aircraft;

(i) unmanned aircraft with an operating mass of no more than 150 kg;

(j) any other aircraft which has a maximum empty mass, including fuel, of no more than 70 kg."

European Aviation Safety Agency

MINOR CHANGE APPROVAL

10026866

Project reference: 0010000546-001

Reference: P-EASA.A.C.12674

This Minor Change Approval is issued by EASA, acting in accordance with Regulation (EC) No. 216/2008 on behalf of the European Community, its Member States and of the European third countries that participate in the activities of EASA under Article 66 of that Regulation and in accordance with Commission Regulation (EC) No. 1702/2003 to

Niessler Handelsagentur
Ferd. Hanuschgasse 8
2345 BRUNN AM GEBIRGE
AUSTRIA

and certifies that the change in the type design for the product listed below with the limitations and conditions specified meets the applicable Type Certification Basis and environmental protection requirements when operated within the conditions and limitations specified below:

Original Product TC Number: **TCDS.IM.A.439 & 223**
TC Holder: **DIAMOND AIRCRAFT INDUSTRIES**
Model: **DV 20, DA 20-A1**

EASA Certification Basis:
JAR-VLA

Description of Design Change:
Installation of an Ameri-King Corporation AK-451 ELT as replacement for a Pointer 3000

Associated Technical Documentation:
EON-003 Engineering Order, dated 24.07.09
EON-003-Installation Instructions, dated 24.07.09
AMM-EON003 Maintenance Manual Supplement, dated 24.07.09

Limitations:
None

Conditions:
1) Prior to installation of this modification the installer must determine that the interrelationship between this modification and any other previously installed modification will introduce no adverse effect upon the airworthiness of the product.

2) The installation of this modification by third persons is subject to written permission of the approval holder and holding and disposal of the approved appropriate documentation.

3) The approval holder shall fulfil the obligations of Part 21, Paragraph 21A.109.

European Aviation Safety Agency

This Approval shall remain valid unless otherwise revoked.

For the European Aviation Safety Agency,

Date of issue: 18.08.2009

Roger HARDY
Certification Manager
General Aviation

austro CONTROL
AOT/ACE Flugtechnik

Änderungen, Reparaturen und Ersatzteile
an historischen Luftfahrzeugen

1

Antrag und Genehmigung von technischen Änderungen, von Reparaturen und Ersatzteilen aufgrund der Zivilluftfahrzeug- und Luftfahrtgerät-Verordnung 2005 an österreichischen Luftfahrzeugen. Die Genehmigung der Daten / Bauteile ersetzt nicht die Freigabe eines Luftfahrzeuges entsprechend den Instandhaltungsbestimmungen Abschnitt V ZLLV 2005 und die Bestimmungen über Nachprüfungen.
2

3 Luftfahrzeug	Hersteller siehe EON004-Installation Instructions,2.Configuration	Type siehe EON004-Installation-Instructions, 2.Configuration
	Serialnummer sieheEON004-Installation Instructions, 2. Configuration	Kennzeichen ----------
4 Halter/Antragsteller	Fa. Niessler Handelsagentur Ferdinand Hanuschgasse 8 A-2345 Brunn am Gebirge	Adresse, Email, Fax Tel.: 0664 230 7557 Fax.: 02236 323 5411 niessler(at)aon.at

5 Beschreibung der Änderung/ Reparatur/ Ersatzteil
Exchange existing i21,5 ELT to AK-451 (AF)(AP) 406MHz ELT

☒ kleine Änderung
☐ große Änderung
☐ Reparatur
☐ Ersatzteil

6 Dokumente/ Nachweise/ Bauurkunden
Engineering Order EON004, 01.04.2010
EON004-Installation Instructions, 01.04.2010
Ground Test Repost, GTN004, AppA, Rev. -
Maintenance Manual Supplement, AMM-EON004, 01.04.2010

☐ Die Übereinstimmung mit den anwendbaren geltenden Bauvorschriften des Baumusters wurden entsprechend § 32 (9) oder (16) ZLLV 2005 geprüft und wurden nachgewiesen. Bestehende eingebaute Änderungen wurden bei der Beurteilung berücksichtigt.
☐ Bei Ersatzteilen wurde die Betriebstüchtigkeit entsprechend § 47(10) ZLLV 2005 geprüft und die Übereinstimmung mit dem Originalbauteil wurde festgestellt.

Die angeführten Dokumente, Nachweise und Bauurkunden liegen vollständig und gültig auf, und bestimmen den Umfang der Änderung.

Datum	7 Entwicklungsbetrieb/ Verfügungsberechtigter/ Luftfahrzeugwart

Der Halter/Antragsteller ersucht um Genehmigung der technischen Änderung/ Reparatur /Ersatzteiles zur Installation/Verwendung am genannten Luftfahrzeug

Datum	8 Halter/Antragsteller
12.04.2010	Norbert Niessler

AUSTRO CONTROL Genehmigungsvermerk, nur zur behördlichen Verwendung

AUSTRO CONTROL genehmigt aufgrund der Bestimmungen der ZLLV 2005 die technische Änderung/Reparatur/den Ersatzteil gem. Feld 5

Datum	Genehmigungszahl	ACG
16.04.2010	AOT 114-7/465-10	

9 Bemerkungen/ Einschränkungen

CAUTION: VALID WITH ORIGINAL SIGNED PERMISSION LETTER ONLY

1. General:

The basic intend of this document is to provide the required information's to install an Ameri-King AK-451-(AF) (AP)/Whi/Por/WW Emergency Locator Transmitter into an airplane listed in Section 2. Configuration. The installation must be carried out by a qualified person. All installation work must be performed in accordance with the acceptable methods, techniques and practices for aircraft alterations, inspections and repair, shown in FAA documents AC 43.13-1B and AC 43.13-2A. In combination to the current EON004 Installation Instructions, the Ameri-King AK-451 Installation Manual P/N IM-45, Rev NC-4.1c2 or later approved version must be used and complied with.

2. Configuration:

The modification illustrated in this Installation Instruction applies to all airplanes listed in this section. The AK-451 main unit must be installed on the same location usually used for a Pointer 3000 ELT. Installation of the remote control switch is mandatory. The AK-451 replaces any other ELT installed on the airplane.

PA 18-TDI	18-8672	PA-18-150	18-7445	Job 15-150/2	71
PA-18	18-6112	PA-18-150	18-7609058	Job 15-150/2	73
PA-18	18-6111	PA-18-150	18-4401	CSS-13	430
PA-18	18-5587	PA-18-150	18-7505	T-131PA	T-131.120
PA-18	18-5500	PA-18-150	18-8872	T-131PA	T-131.117
PA-18	18-156	PA-18-150	18-7736	T-131PA	T-131.111
PA-18	18-6882	PA-18-150	18-8691	T-131PA	T-131.114
PA-18-105	18-2415	PA-18-150	18-8629	T-131PA	T-131.124
PA-18-150	18-7694	PA-18-150	18-8119	T-131PA	T-131.102
PA-18-150	MDC 1042	PA-18-150	18-8009053	T-131PA	T-131.103
PA-18-150	18-7510	PA-18-150	18-8826	T-131PA	T-131.126
PA-18-150	18-4291	PA-18-150	1809019	T-131PA	T-131.110
PA-18-150	18-6336	PA18-180	18-8115	T-131PA	T-131.112
PA-18-150	18-5513	PA18-180	18-6765	T-131PA	T-131.122
		PA-19	18-1459	T-131PA	T-131.115
		PA-19	18-1582	T-131PA	T-131.118
		PA-19	18-2056	T-131PA	T-131.109

3. Approval:

Niessler Handelsagentur as the holder of the current Minor Change Approval is responsible for the instructions for continued airworthiness of this change. In case of any known issues rising due to this modification inform Niessler Handelsagentur so that appropriate actions can be taken.

Email Response from EASA to Ameri-King regarding
Acceptability of FAA Form 8130-3 Export Form in EU Europe Union

From: Ameri-King Corporation

To: EASA European Aviation Safety Agency
Attn: Mr. Runge Friedhelm

Subject: Request for Guideline, Acceptability of FAA Form 8130-3 Export Form in EU

Application: Authorized Release Certificate, FAA Form 8130-3, New TSO Article

Date: October 2, 2009

Dear Runge:

Please advise if the FAA form 8130-3 export form issued to any of 27 EU countries, (equivalent to EASA form 1), is acceptable in all of the 27 European countries ??
i.e. Separate 8130-3 export form for each of the 27 countries is not necessary.

Member states: 27 countries: Austria, Belgium, Bulgaria, Cyprus, Czech Republic, Denmark, Estonia, Finland, France, Germany, Greece, Hungary, Ireland, Italy, Latvia, Lithuania, Luxembourg, Malta, Netherlands, Poland, Portugal, Romania, Slovakia, Slovenia, Spain, Sweden, UK; note - Canary Islands (Spain), Azores and Madeira (Portugal), French Guiana, Guadeloupe, Martinique, and Reunion (France) are sometimes listed separately even though they are legally a part of Spain, Portugal, and France.

Thank you for your prompt response.

Keith Van
Engineering Manager
Ameri-King Corp.
17881 Sampson Lane, Huntington Beach, CA 92648, USA
Phone (714) 842-8555 Fax (714) 842-4235
ameriking9@aol.com www.ameri-king.com

From: Runge Friedhelm <friedhelm.runge@easa.europa.eu>
To: Keith Van <ameriking9@aol.com>
Date: Wed, Oct 7, 2009 4:44 am

RE: Request for Guideline Acceptability of FAA Form 8130-3 Export Form in EU

Dear Keith,

The form 8130-3 is filled once by you for each unit or each lot produced. In accordance with the old bilateral agreements it will be accepted in all EU member states including the specific areas having the specific tax status like Canary Island, Norway, Switzerland, and Iceland.

As the import country is not mentioned at all on the certificate it is issued once by you when manufacturing the unit, like our Form One. We assume that the 8130-3 will be accepted in all the named countries based on the grandfathered existing bilateral agreement with the main players in EU and the US. Due to the fact that the new bilateral is not in place we cannot guarantee that, especially as some countries seem not to be accepted by the US side to be eligible to export into the US.

Unless you state "FOR DOMESTIC SHIPMENTS ONLY," on the Form 8130-3 the Form issued at the end of the production process is intended to be used for import into the EU system as well. In general the form is issued after production and kept for the life time of the unit.

Please come back to me if there are complaints from the European customers.

Best regards

Friedhelm

EASA European Aviation Safety Agency
Parts and Appliances Section
Friedhelm RUNGE
+49 221 89990 4084
friedhelm.runge@easa.europa.eu

Japan Civil Aviation Board Approval

-----Original Message-----
From: 新山 紘加 [mailto:h.niiyama@soumu.go.jp]
Sent: Wednesday, April 07, 2010 10:52 AM
To: 'Yasuhiro Kato'
Cc: 'Takashi Eno'; '田中 友'
Subject: みなし型式検定につきまして

航空部品株式会社　加藤様

いつもお世話になっております。
総務省電波環境課の新山です。

下記について、みなし型式検定の型式に追加されましたのでお知らせします。
よろしくお願いいたします。

AK-451-(AF)
AK-451-(AF)(AP)
AK-451-(AP)
AK-451-(S)
（製造者　Ameri-King Corp.）

****
総務省 総合通信基盤局
電波部 電波環境課 基準認証係
新山 紘加（NIIYAMA Hiroka）
Tel：03-5253-5908(PHS:26788)
mailto：h.niiyama@soumu.go.jp
****

総基環第６８号
平成２２年４月６日

有限会社ユニオン電業
取締役　宮崎　英彰　殿

総務大臣　原口　一博

外国の型式検定に合格している航空機に施設する無線設備の機器（航空機用救命無線機）の型式検定について（通知）

標記について、下記に掲げる航空機に施設する無線設備の機器（航空機用救命無線機）は、無線機器型式検定規則（昭和３６年郵政省令第４０号）に定める当該機器の型式検定に相当するものと認められる外国の型式検定に合格しており、電波法（昭和２５年法律第１３１号）第３７条ただし書及び電波法施行規則（昭和２５年電波監理委員会規則第１４号）第１１条の５第１号の規定に基づく型式検定を要しないものとしたので通知する。

記

１　機器の種類　：　航空機に施設する無線設備の機器（航空機用救命無線機）
２　機器の名称　：　AK-451-(AF)
AK-451-(AF)(AP)
AK-451-(AP)
AK-451-(S)
３　機器の製造者　：　Ameri-King Corp.
４　外国において取得した型式検定について
(1) 承認した機関：　Federal Aviation Administration
(2) 承認番号　：　TSO-C91a、TSO-C126

This page is left blank on purpose.

This page is left blank on purpose.

COSPAS SARSAT

TYPE APPROVAL CERTIFICATE

For a 406 Megahertz Distress Beacon for use with the Cospas-Sarsat Satellite System

Certificate Number: 179

Manufacturer:	Ameri-King Corporation, USA
Beacon Type:	ELT (AF)/(AP)/(S) and PLB
Beacon Model(s):	AK-451(AF), AK-451(AP), AK-451(S), AK-451-PLB
Test Laboratory:	Intespace, Toulouse, France
Dates of Test:	June – October 2006, June – July 2007

Details of the beacon features and battery type are provided overleaf.

The Cospas-Sarsat Council hereby certifies that the 406 MHz Distress Beacon Model identified above is compatible with the Cospas-Sarsat System as defined in documents:

C/S T.001	Specification for Cospas-Sarsat 406 MHz Distress Beacon Issue 3 – Rev. 7, November 2005
C/S T.007	Cospas-Sarsat 406 MHz Distress Beacon Type Approval Standard Issue 4 – Rev. 1, October 2006

Date Originally Issued: 24 September 2007

D. Levesque
Head of Cospas-Sarsat Secretariat

NOTE, HOWEVER:

1. This certificate does not authorize the operation or sale of any 406 MHz distress beacon. Such authorization may require type acceptance by national administrations in countries where the beacon will be distributed, and may also be subject to national licensing requirements.

2. This certificate is intended only as a formal notification to the above identified manufacturer that the Cospas-Sarsat Council has determined, on the basis of test data of a beacon submitted by the manufacturer, that 406 MHz distress beacons of the type identified herein meet the standards for use with the Cospas-Sarsat System.

3. Although the manufacturer has formally stated that all beacons identified with the above model name(s) will meet the Cospas-Sarsat specification referenced above, this certificate is not a warranty and Cospas-Sarsat hereby expressly disclaims any and all liability arising out of or in connection with the issuance, use or misuse of the certificate.

4. This certificate is subject to revocation by the Cospas-Sarsat Council should the beacon type for which it is issued cease to meet the Cospas-Sarsat specification. A new certificate may be issued after satisfactory corrective action has been taken and correct performance demonstrated in accordance with the Cospas-Sarsat Type Approval Standard.

5. Cospas-Sarsat type approval testing requirements only address the electrical performance of the beacon at 406 MHz. Conformance of the beacon to operational and environmental requirements is the responsibility of national administrations.

Operating temperature range:	-20°C to +55°C
Operating lifetime:	24 hours
Transmit frequency:	406.028 MHz
Battery details:	battery pack of 4 (four) D-type cells: - Lithium Sulphur Dioxide, SAFT LO26SXC or - Lithium Manganese Dioxide, SAFT LM33600; or - Lithium Manganese Dioxide, Ultralife U10014.

Beacon model features:

- 121.5/243 MHz auxiliary radio locating device (100 mW, homer duty cycle 40 %);
- Interface to external navigation device;
- Automatic activation via G-switch [1];
- Self-test mode (one burst 520 ms or 440 ms, subject to format flag);
- ELT Remote Unit (P/N 450004) and Remote Audio Buzzer Monitor (P/N 451018) [1];
- Approved for use with external aircraft antennae: blade (AK 451.017-3A), rod (AK 451.017-2A) and whip (AK 451.017-1B) [1];
- Approved for use with detachable portable whip antenna, AK 451.017-4(S) [2].

Approved Beacon Message Protocols: Beacon is approved for encoding with the message protocols indicated with "Yes" and black text below:

USER PROTOCOLS		USER-LOCATION PROTOCOLS		LOCATION PROTOCOLS	
No	Maritime with MMSI	No	Maritime with MMSI	No	Standard Location: EPIRB with MMSI
No	Maritime with Radio Call Sign	No	Maritime with Radio Call Sign	No	Standard Location: EPIRB with Serial Number
No	EPIRB Float Free with Serial Number	No	EPIRB Float Free with Serial Number	Yes	Standard Location: ELT with 24-bit Address
No	EPIRB Non Float Free with Serial Number	No	EPIRB Non Float Free with Serial Number	Yes	Standard Location: ELT with Aircraft Operator Designator
No	Radio Call Sign	No	Radio Call Sign	Yes	Standard Location: ELT with Serial Number
Yes	Aviation	Yes	Aviation	Yes	Standard Location: PLB with Serial Number [3]
Yes	ELT with Serial Number	Yes	ELT with Serial Number	No	National Location: EPIRB
Yes	ELT with Aircraft Operator and Serial Number	Yes	ELT with Aircraft Operator and Serial Number	Yes	National Location: ELT
Yes	ELT with Aircraft 24-bit Address	Yes	ELT with Aircraft 24-bit Address	Yes	National Location: PLB [3]
Yes	PLB with Serial Number [3]	Yes	PLB with Serial Number [3]		
Yes	National (Short Format Message)				
Yes	National (Long Format Message)				

NOTES:
[1] applicable only to models AK-451(AF) and AK-451(AP);
[2] applicable only to models AK-451(S) and AK-451-PLB;
[3] applicable only to model AK-451-PLB.

COSPAS SARSAT

International Satellite System for Search and Rescue
Système international de satellites pour les recherches et le sauvetage
Международная Спутниковая Система Поиска и Спасания

CS07/268/F510 (Ameri-King Corp)

16 October 2007

Mr. Keith Van
Ameri-King Corporation
17881 Sampson Lane
Huntingtom Beach
CA 92646
USA

Dear Mr. Van

Subject: Cospas-Sarsat Type Approval Certificate No 179 (English)

I have pleasure of informing you that the subject Cospas-Sarsat Beacon Models: AK-451(AF), AK-451(AP), AK-451(S) and AK-451-PLB, have now been Cospas-Sarsat Type Approved.

In this respect please find enclosed the original Cospas-Sarsat Type Approval Certificate No. 179 for the above model in English together with three certified copies, and copies of the beacon model report that is published to the Cospas-Sarsat website.

Please let us know if you wish to receive the French and Russian versions of this certificate.

The Secretariat remains at your disposal for any further assistance you may require.

Yours sincerely

Andryey Zhitenev
Technical Officer

Encls: Original certificate no 179 (English) plus three certified copies.

cc: The Cospas-Sarsat Parties (Canada, France, Russia and USA)
Beacon Test Facility (Intespace, Toulouse, France).

International Cospas-Sarsat Programme, 700 de la Gauchetière West, Suite 2450, Montréal (Québec) H3B 5M2, Canada
Tel: +1 514 954 6761 Fax: +1 514 954 6750 Email: mail@cospas-sarsat.int Website: www.cospas-sarsat.org

APPENDIX K
MATERIAL SAFETY DATA SHEET FOR BATTERY
MSDS023

Section 1. Chemical Product And Company Identification

Ultralife Part Number:	U10013, U10014
Description:	Ultralife D Cell, U3356 or U3360
Size:	3 Volt, Manganese Dioxide/Lithium Metal
Ameri-King Part Number:	4500010-1
Ameri-King Description:	Lithium Battery Pack - Non-Rechargeable
National Stock Code:	N/A

Manufactured by	☒**Ultralife Batteries (UK) Ltd.**	☒**Ultralife Batteries, Inc.**
	18 Nuffield Way	**2000 Technology Pkwy**
	Abington, Oxfordshire, OX14 1TG, England	**Newark, NY 14513-2175**
CAGE Code	**U6734**	**0UU59**

Emergency Telephone Number:	**Chemtrec for Spills, Leaks, Fires**
USA	**1-800-424-9300**
International	**703-527-3887**
Technical Contact Telephone Number:	**1-800-332-5000**

Section 2. Composition/Information on Ingredients

Chemical Name	CAS #	Exposure Limits	Percent of Content
Manganese Dioxide, MnO_2	1313-13-9	None Listed	40 – 45
Lithium Metal, Li	7439-93-2	None Listed	3 – 4
Propylene Carbonate, $C_4H_6O_3$	108-32-7	None Listed	4 – 5
Ethylene Glycol Dimethyl Ether, $C_4H_{10}O_2$ Shipping Name: 1,2-Dimethoxyethane	110-71-4	5 ppm TWA 1ppm Pregnant Women	3 – 4
Tetrahydrofuran, C_4H_8O	109-99-9	200 ppm TWA	3 – 4
Lithium Perchlorate, $LiClO_4$	7791-03-9	None Listed	1

Important Note: The materials in this section may only represent a hazard if the integrity of the battery is compromised or if the battery is physically or electrically abused.

Product: Emergency Locator Transmitter (ELT) Battery Pack containing lithium manganese dioxide cells. Each battery pack has a net weight of 1.6 lbs

Electrochemical system: Each battery pack contains 13.2 grams of lithium metal. Each battery pack is diode protected, and fused.

Section 3. Hazards Identification

3.1 Emergency overview: May leak and /or flame if opened, recharged, connected improperly, or disposed of in fire.
3.2 Potential health effects: Skin contact may cause irritation and absorption.
Contact with raw lithium may cause burns.
Routes of entry: Inhalation or ingestion of electrolyte may have toxic effects.
Acute exposure: Electrolyte may irritate skin and eyes.
Effects of chronic exposure: Electrolyte contains a teratogen
3.3 Perchlorate Material - special handling may apply. See www.dtsc.ca.gov/hazardouswaste.

Section 4. First Aid Measures

Electrolyte Contact
Skin- Immediately flush with plenty of water for at least 15 minutes. If symptoms are present after flushing, get medical attention.
Eyes- Immediately flush with plenty of water for at least 15 minutes and get medical attention.
Lithium Metal Contact
Skin- Remove particles of lithium from skin as rapidly as possible. Immediately flush with plenty of water for at least 15 minutes and get medical attention.
Eyes- Immediately flush with plenty of water for at least 15 minutes and get immediate medical attention.

Section 5. Fire Fighting Measures

Extinguishing Media:
Copious amounts of cold water are an effective extinguishing medium for lithium batteries. Do not use warm or hot water.
Do not use Halon type extinguishing material.
Fire Fighting Procedures
Use a positive pressure self-contained breathing apparatus if batteries are involved in a fire.
Full protective clothing is necessary.
During water application, caution is advised as burning pieces of lithium may be ejected from the fire.
Unusual Fire and Explosion Hazards
Batteries may flame or leak potentially hazardous organic vapors if exposed to excessive heat or fire.
Hazardous combustion products
Fire or excessive heat may produce hazardous decomposition products.
Damaged or opened batteries can result in rapid heating and the release of flammable vapors. Vapors are heavier than air and may travel along the ground or be moved by ventilation to an ignition source and flash back.

Section 6. Accidental Release Measures

Damaged batteries that are not hot or burning should be placed in a sealed plastic bag or container.

Section 7. Handling And Storage

Do not store batteries in a manner that allows terminals to short circuit.

Batteries should be separated from other materials and stored in a non-combustible, well ventilated, sprinkler-protected structure with sufficient clearance between walls and battery stacks. Do not place batteries near heating equipment, nor expose to direct sunlight for long periods

Batteries should be stored in a dry area at temperatures no higher than 85°C (194°F). Air conditioning or cooling is not required unless excessively high temperatures above 90°C (194°F) will be encountered. Elevated storage temperatures above 72°C (162°F) can result in reduced battery shelf life and service life, and should be avoided. Batteries should be kept as cool as possible in order to maximize shelf life and service life.

Batteries are not designed to be recharged. Charging a battery may result in electrolyte leakage and/ or cause the battery to flame.

Never disassemble a battery.

Should a battery unintentionally be crushed, thus releasing its contents, rubber gloves must be used to handle all battery components. Avoid inhalation of any vapors that may be emitted.

In the event of skin or eye exposure to the electrolyte, refer to Section 4, First Aid Measures.

More than a momentary short circuit will generally reduce the battery service life. Batteries with fuses will no longer be functional after being shorted.

Extended short circuiting creates high temperatures in the cell. High temperatures can cause burns in skin or cause the cell to flame.

Avoid reversing battery polarity within the battery assembly. To do so may cause cell to flame or to leak.

The use of old and new batteries or batteries of varying sizes and types in the same battery assembly should be avoided. The batteries' electrical characteristics and capabilities vary and damage may result to batteries or electrical equipment.

Section 8. Exposure Controls/Personal Protection

No engineering controls are required for handling batteries that have not been damaged. Personal protective equipment for damaged batteries should include chemical resistant gloves and safety glasses. In the event of a fire, SCBA should be worn along with thermally protective outer garments.

Section 9. Physical And Chemical Properties

Not Applicable

Section 10. Stability And Reactivity

(1) This product is stable under ordinary conditions of use and storage.
(2) It is not recommended that this product be stored above 85°C (194°F).
(3) Damaged batteries will react with water. Non-discharged batteries contain elemental Lithium. This is water reactive. This reaction gives off heat and hydrogen gas. A thermal reaction may occur.
(4) Hazardous decomposition products: Carbon Monoxide (CO), and Hydrogen Flouride (HF)

Section 11. Toxicological Information

(1) Irritancy: The electrolytes contained in this battery can irritate eyes with any contact. Prolonged contact with the skin or mucous membranes may cause irritation.
(2) Sensitization: No information is available at this time.
(3) Carcinogenicity: No information is available at this time.
(4) Reproductive toxicity: No information is available at this time.
(5) Teratogenicity: This product contains a known teratogen as indicated in the chemical information in section 2.
(6) Mutagenicity: No information is available at this time.

Section 12. Ecological Information

Not applicable to this material/product.

Section 13. Disposal Considerations

Batteries must be completely discharged prior to disposal and/ or the terminals must be taped or capped to prevent short circuit. This product does not contain any materials listed by the United Stated EPA as requiring specific waste disposal requirements. When completely discharged it is not considered hazardous. Disposal of large quantities of lithium power cells may be subject to Federal, State, or Local regulations. Consult your local, state and provincial regulations regarding disposal of these batteries.

Section 14. Transport Information

Ultralife's lithium metal primary cells and batteries and lithium ion cells and batteries are classified and regulated as Class 9 dangerous goods (also known as "hazardous materials" in the United States) by the International Civil Aviation Organization (ICAO), International Air Transport Association (IATA), International Maritime Organization (IMO) and many government agencies such as the U.S. Department of Transportation (DOT). These organizations and agencies publish regulations that contain detailed packaging, marking, labeling, documentation, and training requirements that must be followed when offering (shipping) Ultralife's cells and batteries for transportation. **However, small cells and batteries are not subject to certain provisions of the regulations (e.g., Class 9 labeling and UN specification packaging) if they meet specific requirements**. The regulations are based on the UN Recommendations on the Transport of Dangerous Goods Model Regulations and the UN Manual of Tests and Criteria. **These regulations also apply to shipments of cells and batteries that are packed with or contained in equipment.** Failure to comply with these regulations can result in substantial civil or criminal penalties.

Cell and Battery Testing Requirements

The dangerous goods regulations require that each cell and battery design be subject to tests contained in Section 38.3 of the UN Manual of Tests and Criteria prior to being offered for transport. Ultralife's cells and batteries have been tested and comply with all of the UN testing requirements. **Batteries or battery packs constructed from Ultralife's cells must be subjected to tests contained in the UN Manual of Tests and Criteria.**

Additional Information

UN Recommendations on the Transport of Dangerous Goods Model Regulations
IATA Dangerous Goods Regulations
International Maritime Dangerous Goods Code
European Road Regulations (ADR)
U.S. Hazardous Materials Regulations

For more information, please refer to the Transportation Regulations Page on Ultralife's Web Site:

http://www.ultralifebatteries.com/subcategory.php?ID=12

(1) Product is shipped as:

Ground (DOT)	Air (IATA/ICAO)	Water(IMDG)
No ground transportation	Lithium Battery Pack Only #3090 /	Lithium Battery Pack Only #3090 /
shipping requirement for	Emergency Locator Transmitter #3072	Emergency Locator Transmitter #3072
placards	Lithium Batteries / Life-Saving Appliances, Not Self-Inflating	Lithium Batteries / Life-Saving Appliances, Not Self-Inflating

(2) Special shipping information: This battery has been tested to Section 38.3 of 'UN Manual of Tests and Criteria'. These batteries should be placarded and labeled as defined in DOT, IATA and IMDG regulations based on mode of transportation.
These batteries cannot be shipped on passenger aircraft.

Section 15. Regulatory Information

USA: This MSDS meets/exceeds OSHA requirements.
Canada: This product has been classified in accordance with the hazard criteria of the Controlled Products Regulations and the MSDS contains all of the information required by those regulations.
International: This MSDS conforms to European Union (EU), the International Standards Organization (ISO) and the International Labour Organization (ILO) and as documented in ANSI (American National Standards Institute) Standard Z400.1-1993.

Section 16. Other Information

The information contained herein is furnished without warranty of any kind. Users should consider this data only as a supplement to other information gathered by them and must make independent determinations of the suitability and completeness of information from all sources to assure proper use and disposal of these materials and the safety and health of employees and customers.

SAFETY PRECAUTIONS FOR LITHIUM-MANGANESE DIOXIDE ($Li-MnO_2$) CELLS AND BATTERIES

A. GENERAL[1]

1) Lithium-Manganese Dioxide ($Li-MnO_2$) primary (non-rechargeable) cells and batteries have higher energy on a weight and volume basis than conventional batteries such as carbon-zinc and alkaline. $Li-MnO_2$ cells have a typical open circuit voltage (OCV) of 3.3 volts, and a normal operating voltage range of 2.5 to 3.0 volts depending on device current drain and ambient operating temperature. The chemical components that are responsible for their superior energy density may also contribute to an increased safety hazard if they are misused or abused. $Li-MnO_2$ batteries can be used with minimal risk if attention is given to both safety and enhanced performance capability.

2) Personnel who use or handle $Li-MnO_2$ cells and batteries must be familiar with their properties, safety precautions, handling procedures, and transportation and disposal requirements. For information on transportation regulations for lithium batteries refer to Ultralife document UBI-5120: Ultralife Batteries Lithium Battery Transportation Regulations.

3) Insure that batteries are protected from heat, short circuits, compaction, mutilation, or other abusive physical or electrical conditions during storage, use and disposal. Dispose of lithium batteries in accordance with all applicable federal, state and local regulations.

4) Contact Ultralife for questions regarding the proper use and limitations of cells and batteries.

B. HANDLING[1]

Observe the following guidelines when handling lithium cells and batteries:

1) Store batteries in a cool, dry, ventilated area.

2) Keep batteries in their original packaging until ready for use. Do not store cells or batteries loosely in boxes or bins.

3) Use special care in handling batteries. Make sure they are not punctured, crushed, mishandled, disassembled or exposed to storage temperatures exceeding the maximum specified temperature on the product technical data sheet.

4) Inspect batteries prior to use and do not use if there is any evidence of leakage or deformity. Consult the Material Safety Data Sheet (MSDS) for precautions to use when handling leaking batteries.

5) Turn off equipment if battery becomes hot. Wait for battery to cool before removing from equipment.

6) Use batteries only for the application for which they were designed.

7) Take warning labels seriously and follow all safety precautions.

8) Control battery fires in accordance with instructions on the MSDS.

[1] Information Source: RTCA Document No. RTCA/DO-227, June 23, 1995; Appendix C, Lithium Battery Safety Guidelines

SAFETY PRECAUTIONS FOR LITHIUM-MANGANESE DIOXIDE ($Li\text{-}Mn0_2$) CELLS AND BATTERIES

Observe the following precautions when handling lithium cells and batteries:

1) Do not store batteries with other hazardous or combustible materials.

2) Do not heat or incinerate batteries. Do not dispose of batteries with other waste unless permitted by applicable regulations.

3) Do not open, puncture, crush, disassemble, or subject batteries to physical abuse.

4) Do not damage cell fill ports or glass-to-metal seals, as electrolyte leakage can result.

5) Do not charge primary lithium batteries. Charging is considered severe abuse and may result in venting, fire or explosion under some conditions.

6) Do not use a lithium battery in any application except the one for which it is intended.

7) Do not short circuit battery terminals. High current may lead to excessive heating.

8) Do not replace fuses if they activate.

C. INSTALLATION

1) **Installing Battery Packs in the Equipment:** To avoid damage to the battery pack, make sure the battery pack is positioned away from heat sources in the equipment.

2) **Mechanisms to Prevent Dropping:** Be sure to use a battery pack locking mechanism to prevent the battery pack from being ejected if the equipment is dropped or receives a sudden impact.

3) **Preventing Short Circuits and Reversed Connections:** Use a terminal structure that makes it unlikely the terminals will be shorted by metallic objects such as rings, necklaces, clips, hairpins, etc. Structure the battery and the terminals to the battery in such a way that the battery pack cannot be put in backwards when installed in the equipment.

4) **Inclusion in Other Equipment:** If the battery is built into other equipment, use caution to strictly avoid designing airtight battery compartments.

5) **Terminal Materials in the External Equipment:** Use materials that are highly resistant to corrosion (such as nickel or nickel-plated copper). If contact resistance is an issue, we recommend you use contact plating (such as gold plating) on the terminals.

D. USE OF THE BATTERY

See next section on "Safety Warnings for Lithium-Manganese Dioxide Cells and Batteries."

E. PLEASE NOTE

The performance and life expectancy of batteries depends heavily on how the batteries are used. In order to ensure safety, be sure to consult with Ultralife in advance regarding battery storage and operating specifications and equipment structures when designing equipment that includes these batteries.

SAFETY WARNINGS FOR LITHIUM-MANGANESE DIOXIDE ($Li\text{-}Mn0_2$) CELLS AND BATTERIES

A. WHEN USING THE BATTERY

! WARNING !

1) Lithium cells and batteries may get hot, explode or ignite and cause serious injury if exposed to abuse conditions. Be sure to follow the safety warnings listed below:

- Do not place the battery in fire or heat the battery.
- Do not install the battery backwards so the polarity is reversed.
- Do not connect the positive terminal and negative terminal of the battery to each other with any metal object (such as wire).
- Do not carry or store battery together with bracelets, necklaces, hairpins or other metal objects.
- Do not pierce the battery with nails, strike the battery with a hammer, step on the battery or otherwise subject it to strong impacts or shocks.
- Do not solder directly onto the battery.
- Do not expose battery to water or salt water, or allow the battery to get wet.

2) Do not disassemble or modify the battery. The battery contains safety and protection devices, which, if damaged, may cause the battery to generate heat, explode or ignite.

3) Do not place the battery in or near fire, on stoves or other high temperature locations. Do not place the battery in direct sunlight, or use or store the battery inside cars in hot weather. Doing so may cause the battery to generate heat, explode or ignite. Using the battery in this manner may also result in a loss of performance and a shortened life expectancy.

! WARNING !

4) If the device is to be used by small children, the caregiver should explain the contents of this document to the children and provide adequate supervision to ensure the device is being used appropriately.

5) When the battery is discharged, insulate the terminals with adhesive tape or similar materials before disposal.

6) Immediately discontinue use of the battery if, while using or storing the battery, the battery emits an unusual smell, feels hot, changes color or shape, or appears abnormal in any other way. Contact Ultralife if any of these problems are observed.

7) Do not place the battery in microwave ovens, high-pressure containers or on induction cookware.

8) In the event the battery leaks and the fluid gets into one's eye, do not rub the eye. Rinse well with water and immediately seek medical care. If left untreated, the battery fluid could cause damage to the eye. Refer to the MSDS for additional safety and handling instructions.

SAFETY WARNINGS FOR LITHIUM-MANGANESE DIOXIDE ($Li\text{-}MnO_2$) CELLS AND BATTERIES

B. WHEN DISCHARGING THE BATTERY

! WARNING !

Do not discharge the battery using any device except for the specified device. When the battery is used in devices other than the specified device, it may damage the battery or reduce its life expectancy. If the device causes an abnormal current to flow, it may cause the battery to become hot, explode or ignite and cause serious injury.

Refer to the technical data sheets for the temperature ranges over which the battery can be discharged. Use of the battery outside this temperature range may damage performance of the battery or may reduce its life expectancy.

While considerable effort has been taken to accurately represent the information contained herein, Ultralife does not guarantee its accuracy or completeness. Information may contain errors, omissions, inaccuracies, or outdated information, and Ultralife disclaims any obligation to update such information. Ultralife makes no representations or warranties as to the completeness, accuracy, adequacy, currency, or reliability of this information and shall not be liable for any lack of the foregoing. Furthermore, the information does not constitute legal advice on battery design, and should not be considered legal advice, nor substitute for obtaining battery design advice directly from Ultralife engineers.

To ensure user safety, please contact Ultralife Batteries, Inc. when designing a device for use with Ultralife lithium cells and batteries

ULTRALIFE® BATTERIES INC.

Certificate Number: TDG – 0003

Date: November 10, 2004

Issue: Initial Release

Transportation Assessment Trials

Part Number: U10014, U10016

Lithium Content: 3.4 grams

Regulations:

- United Nations Recommendations on the Transport of Dangerous Goods Model Regulations
- European Agreement Concerning the International Carriage of Dangerous Goods by Road (ADR)
- U.S. Code of Federal Regulations CFR 49, parts 100-185 Transportation of Hazardous Materials
- International Air Transport Association (IATA) – Dangerous Goods Regulations
- International Civil Aviation Organization (ICAO) – Technical Instructions for the Safe Transport of Dangerous Goods by Air
- International Maritime Organization – International Maritime Dangerous Goods (IMDG) Code

These batteries have been tested and passed United Nations Manual of Tests and Criteria 38.3 requirements.

They must be shipped as a Class 9, UN3090 material, in an approved Packaging Group 2 container. For details regarding an exception to shipping this product as Class 9, please see 49 CFR 173.185(c).

Certified on behalf of Ultralife Batteries, Inc. by

Jennifer M. Dimock
Environmental, Health and Safety Manager
Ultralife Batteries, Inc.

ULTRALIFE®
BATTERIES INC.

Certificate Number: TDG – 0002

Date: November 10, 2004

Issue: Initial Release

Transportation Assessment Trials

Part Number: U10013, U10015

Lithium Content: 3.4 grams

Regulations:

- United Nations Recommendations on the Transport of Dangerous Goods Model Regulations
- European Agreement Concerning the International Carriage of Dangerous Goods by Road (ADR)
- U.S. Code of Federal Regulations CFR 49, parts 100-185 Transportation of Hazardous Materials
- International Air Transport Association (IATA) – Dangerous Goods Regulations
- International Civil Aviation Organization (ICAO) – Technical Instructions for the Safe Transport of Dangerous Goods by Air
- International Maritime Organization – International Maritime Dangerous Goods (IMDG) Code

These batteries have been tested and passed United Nations Manual of Tests and Criteria 38.3 requirements.

They must be shipped as a Class 9, UN3090 material, in an approved Packaging Group 2 container. For details regarding an exception to shipping this product as Class 9, please see 49 CFR 173.185(c).

Certified on behalf of Ultralife Batteries, Inc. by

Jennifer M. Dimock
Environmental, Health and Safety Manager
Ultralife Batteries, Inc.

FA1305 Rev: – 09/27/04

Ultralife Batteries, Inc. • 2000 Technology Parkway • Newark, NY 14513 • 315-332-7100 • Fax: 315-331-7800
www.ultralifebatteries.com